3-Pipe ECOi EX MF3 Series superior flexibility

Increased piping lengths and design flexibility

Adaptable to various building types and sizes. Actual piping length: 200 m. Maximum piping length: 500 m.

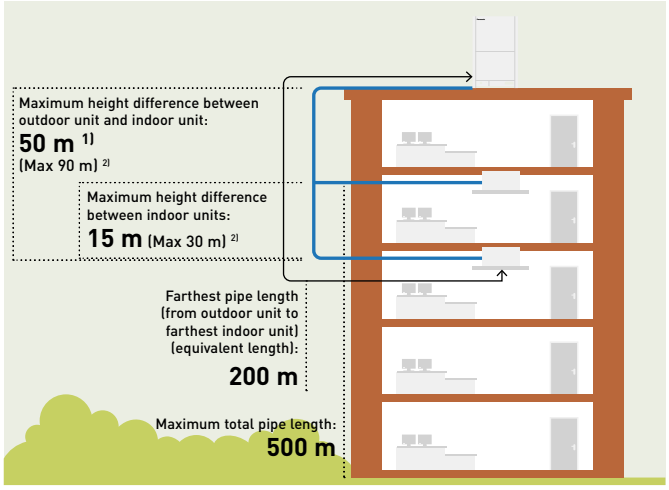

1) 40 m if the outdoor unit is below the indoor unit.
2) For height differences between outdoor unit and indoor unit > 50 m, as well as for height differences between indoor units > 15 m, contact an authorized Panasonic dealer.

Up to 40 m piping after first branch

Up to 52 units can be connected to one system. Flexible piping layout makes it easier to design systems for locations such as train stations, airports, schools and hospitals.

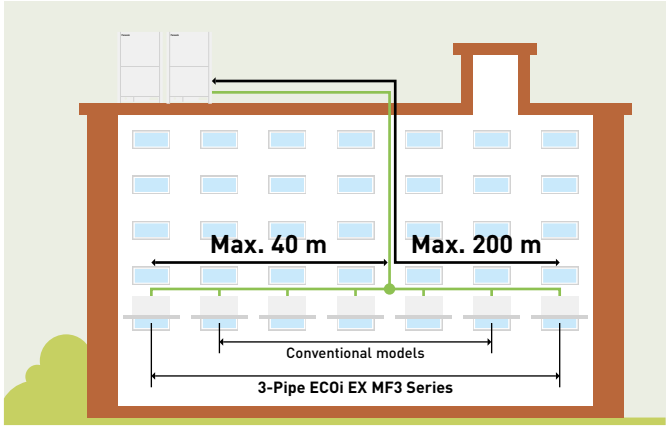

Excellent cost saving and smaller piping size

By using R410A with low pressure loss, pipe sizes for discharge, suction and liquid are all reduced.
This makes it possible to aim for reduced piping space, improved workability at the site, and reduction of the piping material costs.

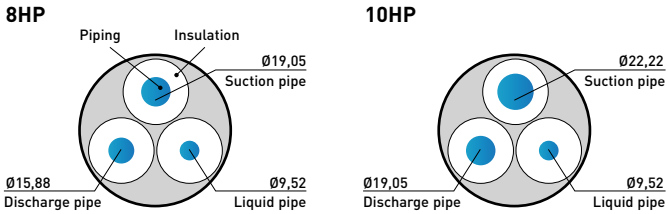

High external static pressure on condensers

With a newly designed fan, fan guard, motor, and casing, new models can be custom-installed on-site to provide up to 80 Pa of external static pressure.

An air discharge duct prevents shortages of air circulation, allowing outdoor units to be installed on every floor of a building.

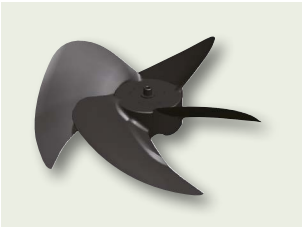

Fan.

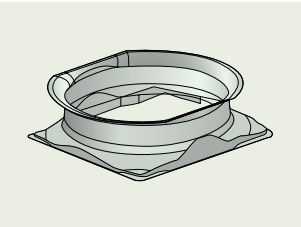

Fan motor and casing.

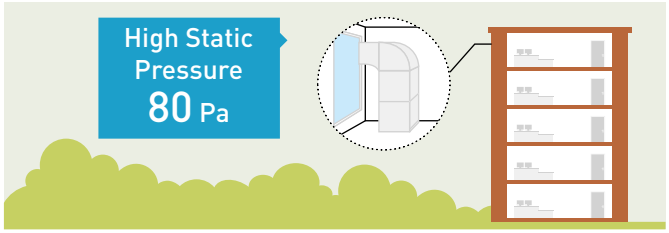

3-Pipe ECOi EX MF3 Series piping design

Select the installation location so that the length and size of refrigerant tubing are within the allowable range shown in the figure below.

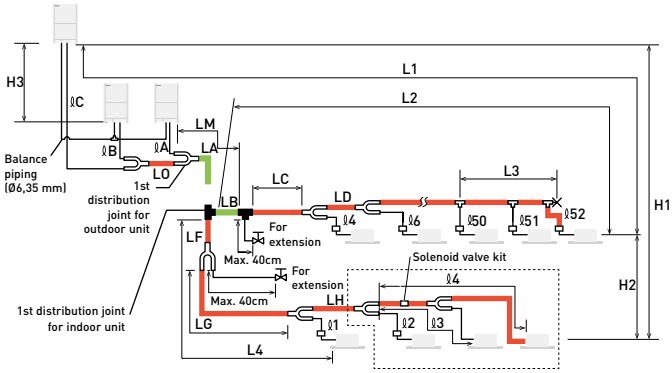

Main piping length (maximum piping size) LM= LA + LB ...

Main distribution tubes LC – LH are selected according to the capacity after the distribution joint.

Sizes of indoor unit connection piping ℓ1 – ℓ52 are determined by the connection piping sizes on the indoor units.

Distribution joint (CZ: optional parts).

T-joint (field supply).

Ball valve (field supply).

Solidly welded shut (pinch weld).

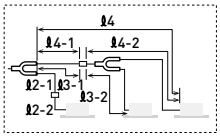

The outdoor connection main piping (LO portion) is determined by the total capacity of the outdoor units that are connected to the tube ends.
Note: Be sure to use special R410A distribution joints (CZ: optional parts) for outdoor unit connections and piping branches.

R410A distribution joint.
CZ-P680PJ2BM (for outdoor unit)
CZ-P1350PJ2BM (for outdoor unit)
CZ-P224BH2BM (for indoor unit)
CZ-P680BH2BM (for indoor unit)
CZ-P1350BH2BM (for indoor unit)

Ranges that apply to refrigerant piping lengths and to differences in installation heights

Items	Mark	Contents		Length (m)
Allowable piping length	L1	Maximum piping length	Actual length	≤200[1]
			Equivalent length	≤210[1]
	Δ L (L2-L4)	Difference between maximum length and minimum length from the 1st distribution joint		≤50[2]
	LM	Maximum length of main piping (at maximum size) *** Even after 1st distribution joint, LM is allowed if at maximum piping length.**		—[3]
	ℓ1, ℓ2~ ℓ52	Maximum length of each distribution tube		≤50[4]
	L1+ ℓ1+ ℓ2~ ℓ51+ ℓA+ℓB+LF+LG+LH	Total maximum piping length including length of each distribution tube (only liquid piping)		≤500
	ℓA, ℓB+LO, ℓC+LO	Maximum piping length from outdoor's 1st distribution joint to each outdoor unit		≤10
	ℓ1-2, ℓ2-2 ~ ℓ52-2	Maximum length between solenoid valve kit and indoor unit		≤30
Allowable elevation difference	H1	When outdoor unit is installed higher than indoor unit		≤50
		When outdoor unit is installed lower than indoor unit		≤40
	H2	Maximum difference between indoor units		≤15[5]
	H3	Maximum difference between outdoor units		≤4
Allowable length of joint piping	L3	T-joint piping (field-supply); Maximum piping length between the first T-joint and solidly welded-shut end point		≤2

L = Length, H = Height

1) If the longest piping length (L1) exceeds 90 m (equivalent length), increase the sizes of the main pipes (LM) by 1 rank for suction pipes, discharge pipes and liquid pipes. Use a field supply reducer. Select the pipe size from the table of main piping sizes (Table 3) and from the table of refrigerant piping sizes (Table 8). 2) If the longest main piping length (LM) exceeds 50 m, increase the main piping size at the portion before 50 m by 1 rank for the suction pipes and discharge pipes. Use a field supply reducer. Determine the length less than the limitation of allowable maximum piping length. For the portion that exceeds 50 m, set based on the main piping size (LA) listed in Table 3. 3) If the piping length marksd "L" (L2-L4) exceeds 40 m, increase the piping size at the portion after the 1st distribution joint by 1 rank for the liquid pipe, suction pipe and discharge pipe. Refer to the Technical Data for the details. 4) If any of the piping length exceeds 30 m, increase the size of the suction pipes,discharge pipes and liquid pipes by 1rank.
* The outdoor connection main piping (LO portion) is determined by the total capacity of the outdoor units that are connected to the pipe ends.

System limitations.

Maximum number allowable connected outdoor units	3
Maximum capacity allowable connected outdoor units	135 kW (48 HP)
Maximum connectable indoor units	52
Maximum allowable indoor / outdoor capacity ratio	50-150 %

1) In the case of 24 HP (type 68 kW) or smaller units, the number is limited by the total capacity of the connected indoor units.
2) Up to 3 units can be connected if the system has been extended.
3) It is strongly recommended that you choose the unit so the load can become between 50 and 130 %.

Additional refrigerant charge.

Liquid piping size Inch (mm)	Amount of refrigerant charge/m (g/m)
1/4 (6,35)	26
3/8 (9,52)	56
1/2 (12,70)	128
5/8 (15,88)	185
3/4 (19,05)	259
7/8 (22,22)	366

Necessary amount of additional refrigerant charge per meter, according to discharge piping size.

Discharge piping size	Inch (mm)	1/2 (12,70)	5/8 (15,88)	3/4 (19,05)	7/8 (22,22)	1 (25,40)	1-1/8 (28,58)	1-1/4 (31,75)	1-1/2 (38,10)
Additional amount	g/m	12	21	31	41	55	71	89	126

Refrigerant piping.

Piping size (mm)											
Material Temper - O						Material Temper - 1/2 H, H					
Ø6,35	t 0,8	Ø12,70	t 0,8	Ø19,05	t 1,2	Ø22,22	t 1,0	Ø28,58	t 1,0	Ø38,10	t 1,15
Ø9,52	t 0,8	Ø15,88	t 1,0			Ø25,40	t 1,0	Ø31,75	t 1,1	Ø41,28	t 1,20

* When bending the tubes, use a bending radius that is at least 4 times the outer diameter of the tubes. In addition, take sufficient care to avoid crushing or damaging the tubes when bending them.

4,9 SCOP

3-Pipe ECOi EX MF3 Series

Simultaneous heating and cooling operation with heat recovery type.
The 3-Pipe ECOi EX MF3 Series is one of the most advanced VRF systems.
Not only high-efficient performance for simultaneous heating and cooling, but also sophisticated installation and maintenance available.

			8 HP	10 HP	12 HP	14 HP	16 HP
Outdoor units			**U-8MF3E8**	**U-10MF3E8**	**U-12MF3E8**	**U-14MF3E8**	**U-16MF3E8**
Power supply	Voltage	V	380 - 400 - 415	380 - 400 - 415	380 - 400 - 415	380 - 400 - 415	380 - 400 - 415
	Phase		Three phase	Three phase	Three phase	Three phase	Three phase
	Frequency	Hz	50	50	50	50	50
Cooling capacity		kW	22,4	28,0	33,5	40,0	45,0
EER [1]		W/W	5,11	4,72	3,91	3,70	3,49
SEER [2]			**7,0**	**7,1**	**6,4**	**6,7**	**6,0**
Running current cooling		A	7,16 / 6,80 / 6,55	9,90 / 9,41 / 9,07	3,19 / 13,20 / 12,70	18,20 / 17,30 / 16,70	21,30 / 20,20 / 19,50
Input power cooling		kW	4,38	5,93	8,57	10,80	12,90
Heating capacity		kW	25,0	31,5	37,5	45,0	50,0
COP [1]		W/W	5,25	5,17	4,51	4,21	4,17
SCOP [2]			**4,9**	**4,3**	**4,3**	**4,1**	**3,8**
Running current heating		A	7,78 / 7,39 / 7,12	10,20 / 9,66 / 9,31	13,40 / 12,80 / 12,30	18,10 / 17,20 / 16,50	20,00 / 19,00 / 18,30
Input power heating		kW	4,76	6,09	8,32	10,70	12,00
Starting current		A	1,00	1,00	1,00	2,00	2,00
External static pressure (Max)		Pa	80	80	80	80	80
Air flow		m³/min	210	220	232	232	232
Sound pressure	Normal mode	dB(A)	54,00	57,00	60,00	61,00	62,00
	Silent mode 1 / 2	dB(A)	51,00 / 49,00	54,00 / 52,00	57,00 / 55,00	58,00 / 56,00	59,00 / 57,00
Sound power	Normal mode	dB(A)	76,00	78,00	81,00	82,00	82,00
Dimension	H x W x D	mm	1842 x 1180 x 1000	1842 x 1180 x 1000	1842 x 1180 x 1000	1842 x 1180 x 1000	1842 x 1180 x 1000
Net weight		kg	261	262	286	334	334
Pipe diameter [3]	Liquid pipe	Inch (mm)	3/8 (9,52) / 1/2 (12,70)	3/8 (9,52) / 1/2 (12,70)	1/2 (12,70) / 5/8 (15,88)	1/2 (12,70) / 5/8 (15,88)	1/2 (12,70) / 5/8 (15,88)
	Discharge pipe	Inch (mm)	5/8 (15,88) / 3/4 (19,05)	3/4 (19,05) / 7/8 (22,22)	3/4 (19,05) / 7/8 (22,22)	7/8 (22,22) / 1 (25,40)	7/8 (22,22) / 1 (25,40)
	Suction pipe	Inch (mm)	3/4 (19,05) / 7/8 (22,22)	7/8 (22,22) / 1 (25,40)	1 (25,40) / 1-1/8 (28,58)	1 (25,40) / 1-1/8 (28,58)	1-1/8(28,58)/1-1/4(31,75)
	Balance pipe	Inch (mm)	1/4 (6,35)	1/4 (6,35)	1/4 (6,35)	1/4 (6,35)	1/4 (6,35)
Refrigerant (R410A) / CO_2 Eq.		kg / T	6,80 / 14,1984	6,80 / 14,1984	8,30 / 17,3304	8,30 / 17,3304	8,30 / 17,3304
Maximum allowable indoor / outdoor capacity ratio %			50 ~ 150	50 ~ 150	50 ~ 150	50 ~ 150	50 ~ 150
Operating range	Cool Min ~ Max	°C	-10 ~ +52	-10 ~ +52	-10 ~ +52	-10 ~ +52	-10 ~ +52
	Heat Min ~ Max	°C	-20 ~ +18	-20 ~ +18	-20 ~ +18	-20 ~ +18	-20 ~ +18
	Simultaneous op.	°C	-10 ~ +24	-10 ~ +24	-10 ~ +24	-10 ~ +24	-10 ~ +24

Solenoid valve kit		
KIT-P56HR3	**KIT-P56HR3**	3-Pipe control Solenoid valve kit (up to 5,6 kW)
	CZ-P56HR3	Solenoid valve kit (up to 5,6 kW)
	CZ-CAPE2	3-Pipe control PCB
KIT-P160HR3	**KIT-P160HR3**	3-Pipe control Solenoid valve kit (from 5,6 to 16,0 kW)
	CZ-P160HR3	Solenoid valve kit (from 5,6 kW to 16,0 kW)
	CZ-CAPE2	3-Pipe control PCB
CZ-CAPEK2 [4]		3-Pipe control PCB for wall-mounted

3-Pipe control box kit	
CZ-P456HR3	4 ports 3 pipe box (up to 5,6 kW per port)
CZ-P656HR3	6 ports 3 pipe box (up to 5,6 kW per port)
CZ-P856HR3	8 ports 3 pipe box (up to 5,6 kW per port)
CZ-P4160HR3	4 ports 3 pipe box (up to 16,0 kW per port)

1) EER and COP calculation is based in accordance to EN14511. 2) SEER/SCOP is calculated based on the seasonal space cooling/heating efficiency "η" values of the COMMISSION REGULATION (EU) 2016/2281. SEER, SCOP = (η + Correction) × PEF. 3) Pipe diameter under 90 m for ultimate indoor unit / over 90 m for ultimate indoor unit (if the longest piping equivalent length exceeds 90 m, increase the sizes of the main tubes by 1 rank for gas tubes and liquid tubes). 4) Available for S-45/56/73/106MK2E5B.

- Achieving SCOP 4,8 as the top class in the industry (LOT21 Seasonal heating efficiency value for 8 HP outdoor unit)
- Simultaneous cooling and heating operation with up to 39 indoor units
- Slim heat recovery boxes with just 200 mm height fit with the ceiling space limited in hotel applications
- Rotation operation function and back-up operation function provided

HIGH COP | INVERTER+ | -20°C HEATING MODE

Technical focus

- High SEER/SCOP at full Load capacity (follows LOT21)
- EER, COP: Eurovent certified
- Standardisation of outdoor unit to one compact casing size
- The constant-speed compressor adopts a high-performance internal high-pressure scroll
- Up to 52 indoor units connectable
- High external static pressure 80 Pa with a newly designed fan, fan guard, motor, and casing
- Silent outdoor unit operation: Minimum 54 dB(A) for 8 HP
- Bluefin condenser outdoor unit

3-Pipe ECOi EX MF3 Series Combination from 18 to 32 HP

HP			18 HP	20 HP	22 HP	24 HP	26 HP	28 HP	30 HP	32 HP
Model name			U-8MF3E8	U-8MF3E8	U-10MF3E8	U-12MF3E8	U-10MF3E8	U-12MF3E8	U-14MF3E8	U-16MF3E8
			U-10MF3E8	U-12MF3E8	U-12MF3E8	U-12MF3E8	U-16MF3E8	U-16MF3E8	U-16MF3E8	U-16MF3E8
Power supply	Voltage	V	380 - 400 - 415	380 - 400 - 415	380 - 400 - 415	380 - 400 - 415	380 - 400 - 415	380 - 400 - 415	380 - 400 - 415	380 - 400 - 415
	Phase		Three phase	Three phase	Three phase	Three phase	Three phase	Three phase	Three phase	Three phase
	Frequency	Hz	50	50	50	50	50	50	50	50
Cooling capacity		kW	50,0	56,0	61,5	68,0	73,0	78,5	85,0	90,0
EER 1)		W/W	4,90	4,31	4,24	3,89	3,88	3,65	3,59	3,49
Running current cooling		A	16,8/16,0/15,4	21,0/20,0/19,2	23,7/22,5/21,7	28,3/26,9/25,9	31,0/29,5/28,4	35,1/33,4/32,2	39,6/37,6/36,2	42,6/40,5/39,0
Input power cooling		kW	10,20	13,00	14,50	17,50	18,80	21,50	23,70	25,8
Heating capacity		kW	56,0	63,0	69,0	76,5	81,5	87,5	95,0	100,0
COP 1)		W/W	5,23	4,77	4,79	4,47	4,50	4,31	4,19	4,17
Running current heating		A	17,7/16,8/16,2	21,3/20,3/19,5	23,5/22,3/21,5	27,6/26,3/25,3	30,2/28,7/27,7	33,5/31,8/30,7	37,9/36,0/34,7	40,1/38,1/36,7
Input power heating		kW	10,70	13,20	14,40	17,10	18,10	20,30	22,70	24,00
Starting current		A	2,00	2,00	2,00	2,00	3,00	3,00	4,00	4,00
External static pressure (Max)		Pa	80	80	80	80	80	80	80	80
Air flow		m³/min	430	442	452	464	452	464	464	464
Sound pressure	Normal mode	dB(A)	59,00	61,00	62,00	63,00	63,50	64,50	64,50	65,00
	Silent mode 1 / 2	dB(A)	56,00/54,00	58,00/56,00	59,00/57,00	60,00/58,00	60,50/58,50	61,50/59,50	61,50/59,50	62,00/60,00
Sound power	Normal mode	dB(A)	81,50	84,00	84,50	86,00	84,50	86,00	86,00	86,00
Dimension	H x W x D	mm	1842 x 2360 (+60) x 1000	1842 x 2360 (+60) x 1000	1842 x 2360 (+60) x 1000	1842 x 2360 (+60) x 1000	1842 x 2360 (+60) x 1000	1842 x 2360 (+60) x 1000	1842 x 2360 (+60) x 1000	1842 x 2360 (+60) x 1000
Net weight		kg	523	547	548	574	596	620	668	668
Pipe diameter 2)	Liquid pipe	Inch (mm)	5/8 (15,88) / 3/4 (19,05)	5/8 (15,88) / 3/4 (19,05)	5/8 (15,88) / 3/4 (19,05)	5/8 (15,88) / 3/4 (19,05)	3/4 (19,05) / 7/8 (22,22)	3/4 (19,05) / 7/8 (22,22)	3/4 (19,05) / 7/8 (22,22)	3/4 (19,05) / 7/8 (22,22)
	Discharge pipe	Inch (mm)	7/8 (22,22) / 1 (25,40)	7/8 (22,22) / 1 (25,40)	1 (25,40) / 1-1/8 (28,58)	1 (25,40) / 1-1/8 (28,58)	1 (25,40) / 1-1/8 (28,58)	1-1/8 (28,58) / 1-1/4 (31,75)	1-1/8 (28,58) / 1-1/4 (31,75)	1-1/8 (28,58) / 1-1/4 (31,75)
	Suction pipe	Inch (mm)	1-1/8 (28,58) / 1-1/4 (31,75)	1-1/8 (28,58) / 1-1/4 (31,75)	1-1/8 (28,58) / 1-1/4 (31,75)	1-1/8 (28,58) / 1-1/4 (31,75)	1-1/4 (31,75) / 1-1/2 (38,10)	1-1/4 (31,75) / 1-1/2 (38,10)	1-1/4 (31,75) / 1-1/2 (38,10)	1-1/4 (31,75) / 1-1/2 (38,10)
	Balance pipe	Inch (mm)	1/4 (6,35)	1/4 (6,35)	1/4 (6,35)	1/4 (6,35)	1/4 (6,35)	1/4 (6,35)	1/4 (6,35)	1/4 (6,35)
Refrigerant (R410A) / CO_2 Eq.		kg / T	13,60/28,3968	15,10/31,5288	15,10/31,5288	16,60/34,6608	15,10/31,5288	16,60/34,6608	16,60/34,6608	16,60/34,6608
Maximum allowable indoor / outdoor capacity ratio %			50 ~ 150	50 ~ 150	50 ~ 150	50 ~ 150	50 ~ 150	50 ~ 150	50 ~ 150	50 ~ 150
Operating range	Cool Min ~ Max	°C	-10 ~ +52	-10 ~ +52	-10 ~ +52	-10 ~ +52	-10 ~ +52	-10 ~ +52	-10 ~ +52	-10 ~ +52
	Heat Min ~ Max	°C	-20 ~ +18	-20 ~ +18	-20 ~ +18	-20 ~ +18	-20 ~ +18	-20 ~ +18	-20 ~ +18	-20 ~ +18
	Simultaneous op.	°C	-10 ~ +24	-10 ~ +24	-10 ~ +24	-10 ~ +24	-10 ~ +24	-10 ~ +24	-10 ~ +24	-10 ~ +24

3-Pipe ECOi EX MF3 Series Combination from 34 to 48 HP

HP			34 HP	36 HP	38 HP	40 HP	42 HP	44 HP	46 HP	48 HP
Model name			U-8MF3E8	U-8MF3E8	U-10MF3E8	U-8MF3E8	U-10MF3E8	U-12MF3E8	U-14MF3E8	U-16MF3E8
			U-10MF3E8	U-12MF3E8	U-12MF3E8	U-16MF3E8	U-16MF3E8	U-16MF3E8	U-16MF3E8	U-16MF3E8
			U-16MF3E8	U-16MF3E8	U-16MF3E8	U-16MF3E8	U-16MF3E8	U-16MF3E8	U-16MF3E8	U-16MF3E8
Power supply	Voltage	V	380 - 400 - 415	380 - 400 - 415	380 - 400 - 415	380 - 400 - 415	380 - 400 - 415	380 - 400 - 415	380 - 400 - 415	380 - 400 - 415
	Phase		Three phase	Three phase	Three phase	Three phase	Three phase	Three phase	Three phase	Three phase
	Frequency	Hz	50	50	50	50	50	50	50	50
Cooling capacity		kW	96,0	101,0	107,0	113,0	118,0	124,0	130,0	135,0
EER 1)		W/W	4,10	3,90	3,88	3,72	3,72	3,58	3,55	3,49
Running current cooling		A	38,6/36,7/35,4	42,3/40,2/38,7	45,6/43,3/41,7	50,2/47,7/46,0	52,4/49,7/47,9	56,5/53,7/51,8	61,1/58,1/56,0	63,9/60,7/58,5
Input power cooling		kW	23,40	25,90	27,60	30,40	31,70	34,60	36,60	38,70
Heating capacity		kW	108,0	113,0	119,0	127,0	132,0	138,0	145,0	150,0
COP 1)		W/W	4,64	4,48	4,51	4,31	4,36	4,25	4,18	4,17
Running current heating		A	38,9/37,0/35,6	41,6/39,5/38,1	43,6/41,4/39,9	49,3/46,8/45,1	50,6/48,1/46,3	53,7/51,0/49,1	57,9/55,0/53,0	60,1/57,1/55,0
Input power heating		kW	23,30	25,20	26,40	29,50	30,30	32,50	34,70	36,00
Starting current		A	4,00	4,00	4,00	5,00	5,00	5,00	6,00	6,00
External static pressure (Max)		Pa	80	80	80	80	80	80	80	80
Air flow		m³/min	662	674	684	674	684	696	696	696
Sound pressure	Normal mode	dB(A)	64,00	64,50	65,00	65,50	66,00	66,50	66,50	67,00
	Silent mode 1 / 2	dB(A)	61,00/59,00	61,50/59,50	62,00/60,00	62,50/60,50	63,00/61,00	63,50/61,50	63,50/61,50	64,00/62,00
Sound power	Normal mode	dB(A)	84,50	85,50	85,50	85,50	86,00	86,50	87,00	87,00
Dimension	H x W x D	mm	1842 x 3540 (+120) x 1000	1842 x 3540 (+120) x 1000	1842 x 3540 (+120) x 1000	1842 x 3540 (+120) x 1000	1842 x 3540 (+120) x 1000	1842 x 3540 (+120) x 1000	1842 x 3540 (+120) x 1000	1842 x 3540 (+120) x 1000
Net weight		kg	857	881	882	929	930	954	1002	1002
Pipe diameter 2)	Liquid pipe	Inch (mm)	3/4 (19,05) / 7/8 (22,22)	3/4 (19,05) / 7/8 (22,22)	3/4 (19,05) / 7/8 (22,22)	3/4 (19,05) / 7/8 (22,22)	3/4 (19,05) / 7/8 (22,22)	3/4 (19,05) / 7/8 (22,22)	3/4 (19,05) / 7/8 (22,22)	3/4 (19,05) / 7/8 (22,22)
	Discharge pipe	Inch (mm)	1-1/8 (28,58) / 1-1/4 (31,75)	1-1/8 (28,58) / 1-1/4 (31,75)	1-1/4 (31,75) / 1-1/2 (38,10)	1-1/4 (31,75) / 1-1/2 (38,10)	1-1/4 (31,75) / 1-1/2 (38,10)	1-1/4 (31,75) / 1-1/2 (38,10)	1-1/4 (31,75) / 1-1/2 (38,10)	1-1/4 (31,75) / 1-1/2 (38,10)
	Suction pipe	Inch (mm)	1-1/4 (31,75) / 1-1/2 (38,10)	1-1/2 (38,10) / 1-5/8 (41,28)	1-1/2 (38,10) / 1-5/8 (41,28)	1-1/2 (38,10) / 1-5/8 (41,28)	1-1/2 (38,10) / 1-5/8 (41,28)	1-1/2 (38,10) / 1-5/8 (41,28)	1-1/2 (38,10) / 1-5/8 (41,28)	1-1/2 (38,10) / 1-5/8 (41,28)
	Balance pipe	Inch (mm)	1/4 (6,35)	1/4 (6,35)	1/4 (6,35)	1/4 (6,35)	1/4 (6,35)	1/4 (6,35)	1/4 (6,35)	1/4 (6,35)
Refrigerant (R410A) / CO_2 Eq.		kg / T	21,90/45,72719	23,40/48,85919	23,40/48,85919	23,40/48,85919	23,40/48,85919	24,90/46,3536	24,90/51,9912	24,90/51,9912
Maximum allowable indoor / outdoor capacity ratio %			50 ~ 150	50 ~ 150	50 ~ 150	50 ~ 150	50 ~ 150	50 ~ 150	50 ~ 150	50 ~ 150
Operating range	Cool Min ~ Max	°C	-10 ~ +52	-10 ~ +52	-10 ~ +52	-10 ~ +52	-10 ~ +52	-10 ~ +52	-10 ~ +52	-10 ~ +52
	Heat Min ~ Max	°C	-20 ~ +18	-20 ~ +18	-20 ~ +18	-20 ~ +18	-20 ~ +18	-20 ~ +18	-20 ~ +18	-20 ~ +18
	Simultaneous op.	°C	-10 ~ +24	-10 ~ +24	-10 ~ +24	-10 ~ +24	-10 ~ +24	-10 ~ +24	-10 ~ +24	-10 ~ +24

1) EER and COP calculation is based in accordance to EN14511. 2) Pipe diameter under 90 m for ultimate indoor unit / over 90 m for ultimate indoor unit (if the longest piping equivalent length exceeds 90 m, increase the sizes of the main tubes by 1 rank for gas tubes and liquid tubes).

Rating Conditions: Cooling Indoor 27 °C DB / 19 °C WB. Cooling Outdoor 35 °C DB / 24 °C WB. Heating Indoor 20 °C DB. Heating Outdoor 7 °C DB / 6 °C WB. (DB: Dry Bulb; WB: Wet Bulb).
Specifications subject to change without notice. For detailed information about ErP / Energy Labelling, please visit our websites www.aircon.panasonic.eu or www.ptc.panasonic.eu.

1. Outdoor Unit

1-1. Specifications

Unit specifications (1)

OUTDOOR		MODEL	U-8MF3E8			U-10MF3E8			U-12MF3E8		
Performance test condition			EN14511, EN14825			EN14511, EN14825			EN14511, EN14825		
Power supply		Ø,Hz	3Ø, 380-400-415V, 50Hz			3Ø, 380-400-415V, 50Hz			3Ø, 380-400-415V, 50Hz		
		V	380	400	415	380	400	415	380	400	415
COOLING	Capacity *3	kW	22.4	22.4	22.4	28.0	28.0	28.0	33.5	33.5	33.5
		BTU/h	76500	76500	76500	95600	95600	95600	114300	114300	114300
	Current *3	A	7.16	6.80	6.55	9.90	9.41	9.07	13.9	13.2	12.7
	Input power *3	W	4.38k	4.38k	4.38k	5.93k	5.93k	5.93k	8.57k	8.57k	8.57k
	EER *3	(W/W)	5.11	5.11	5.11	4.72	4.72	4.72	3.91	3.91	3.91
	Power factor *3	%	93	93	93	91	91	91	94	94	94
	ηs,c *4	%	277.7			278.9			252.7		
	Noise outdoor *3	dB-A (Normal)	54.0			57.0			60.0		
		Power Level dB (Normal)	76.0			78.0			81.0		
		dB-A (Silent 1)	51.0			54.0			57.0		
		dB-A (Silent 2)	49.0			52.0			55.0		
HEATING	Capacity *3	kW	25.0	25.0	25.0	31.5	31.5	31.5	37.5	37.5	37.5
		BTU/h	85300	85300	85300	107500	107500	107500	128000	128000	128000
	Current *3	A	7.78	7.39	7.12	10.2	9.66	9.31	13.4	12.8	12.3
	Input power *3	W	4.76k	4.76k	4.76k	6.09k	6.09k	6.09k	8.32k	8.32k	8.32k
	COP *3	(W / W)	5.25	5.25	5.25	5.17	5.17	5.17	4.51	4.51	4.51
	Power factor *3	%	93	93	93	91	91	91	94	94	94
	ηs,h *4	%	190.9			166.8			167.8		
Max Current (A) / Max Input power (W)			14.0 / 8.57k	14.0 / 9.02k	14.0 / 9.36k	18.0 / 10.8k	18.0 / 11.3k	18.0 / 11.8k	20.0 / 12.4k	20.0 / 13.0k	20.0 / 13.5k
Starting current (A)			1	1	1	1	1	1	1	1	1
Time Delay fuse max size (A)			25			25			30		
Fan motor output		W / Pole number	750 / 8			750 / 8			750 / 8		
External static pressure		Pa	80			80			80		
Air flow		m^3/ min	210			220			232		
Refrigerant type / amount g			R410A / 6.8k			R410A / 6.8k			R410A / 8.3k		
Product dimension		Height mm	1842			1842			1842		
		Width mm	1180			1180			1180		
		Depth mm	1000			1000			1000		
Packing dimension		Height mm	1977			1977			1977		
		Width mm	1280			1280			1280		
		Depth mm	1100			1100			1100		
Weight		(NET) kg	261			262			286		
		(GROSS) kg	281			282			306		
Layers limit			1			1			1		
Operation condition (Outdoor)		Cool (DBT)	-10°C ~ 52°C			-10°C ~ 52°C			-10°C ~ 52°C		
		Heat (WBT)	-20°C ~ 18°C			-20°C ~ 18°C			-20°C ~ 18°C		
		Cool & Heat (DBT)	-10°C ~ 24°C			-10°C ~ 24°C			-10°C ~ 24°C		
MAX. WORKING PRESSURE		High side bar (MPa)	38.0 (3.80)			38.0 (3.80)			38.0 (3.80)		
		Low side bar (MPa)	31.1 (3.11)			31.1 (3.11)			31.1 (3.11)		
PIPING	Pipe diameter mm (inch) (Under 90m for ultimate Indoor unit)		(Liquid) 9.52(3/8) (Discharge) 15.88 (5/8) (Suction) 19.05 (3/4)			(Liquid) 9.52 (3/8) (Discharge) 19.05(3/4) (Suction) 22.22 (7/8)			(Liquid) 12.7 (1/2) (Discharge) 19.05(3/4) (Suction) 25.4 (1inch)		
	Pipe diameter mm (inch) *1 (Over 90m for ultimate Indoor unit)		(Liquid) 12.7 (1/2) (Discharge) 19.05 (3/4) (Suction) 22.22 (7/8)			(Liquid) 12.7 (1/2) (Discharge) 22.22 (7/8) (Suction) 25.4 (1inch)			(Liquid) 15.88 (5/8) (Discharge) 22.22 (7/8) (Suction) 28.58 (1-1/8)		
	Balance pipe mm (inch)		6.35 (1/4)			6.35 (1/4)			6.35 (1/4)		
	Connecting method		(Balance) & (Liquid) & (Discharge) flared type, (Suction) brazing connection			(Balance) & (Liquid) flared type, (Suction) & (Discharge) brazing connection			(Balance) & (Liquid)flared type, (Suction) & (Discharge) brazing connection		
	Max tubing length	Actual length m	7.5	~	200	7.5	~	200	7.5	~	200
		Equivalent length m	7.5	~	210	7.5	~	210	7.5	~	210
	Total Max tubing length m		7.5	~	500	7.5	~	500	7.5	~	500
	Indoor unit & Outdoor unit height difference (Outdoor unit upper / Outdoor unit Lower) m		50 / 40			50 / 40			50 / 40		
Max connectable indoor units pcs.			15 (19 *2)			19 (24 *2)			22 (29 *2)		
Max allowable indoor/outdoor capacity ratio %			50 ~ 150			50 ~ 150			50 ~ 150		

*1: If the longest tubing equivalent length exceeds 90m, increase the sizes of the main tubes by 1 rank for suction tubes , discharge tubes and liquid tubes.
*2: In case that all connected indoor unit are only mini cassette (Y type), wall mounted (K type) and slim duct (M type), maximum number of indoor unit is able to increase (Able to apply bigger value). If one or more another indoor unit is conneced, maximum number of indoor unit is smaller value.
*3: Indoor units combination of performance test, 8HP: S-22MF2E5×8+S-22MU2E5A×2, 10HP: S-22MF2E5×9+S-45MF2E5×1+S-22MU2E5A×2
Measured according with EN14511. 12HP: S-22MF2E5×8+S-60MF2E5×2+S-22MU2E5A×2
*4: Measured according with EN14825.
The number of max connectable outdoor units are 3.
Necessary amount of additional refrigerant charge per outdoor unit, for 8HP or 10HP is 6.0kg, for 12HP or 14HP or 16HP is 7.4kg.
Max total refrigerant amount of 1 outdoor unit is 50kg, for 2 outdoor units is 80kg, for 3 outdoor units is 100kg.

1. Outdoor Unit

1-1. Specifications

Unit specifications (2)

OUTDOOR		MODEL	U-14MF3E8			U-16MF3E8		
Performance test condition			EN14511, EN14825			EN14511, EN14825		
Power supply		Ø,Hz	3Ø, 380-400-415V, 50Hz			3Ø, 380-400-415V, 50Hz		
		V	380	400	415	380	400	415
COOLING	Capacity *3	kW	40.0	40.0	40.0	45.0	45.0	45.0
		BTU/h	136500	136500	136500	153600	153600	153600
	Current *3	A	18.2	17.3	16.7	21.3	20.2	19.5
	Input power *3	W	10.8k	10.8k	10.8k	12.9k	12.9k	12.9k
	EER *3	(W/W)	3.70	3.70	3.70	3.49	3.49	3.49
	Power factor *3	%	90	90	90	92	92	92
	ηs,c *4	%	264.4			237.7		
	Noise outdoor *3	dB-A (Normal)	61.0			62.0		
		Power Level dB (Normal)	82.0			82.0		
		dB-A (Silent 1)	58.0			59.0		
		dB-A (Silent 2)	56.0			57.0		
HEATING	Capacity *3	kW	45.0	45.0	45.0	50.0	50.0	50.0
		BTU/h	153600	153600	153600	170600	170600	170600
	Current *3	A	18.1	17.2	16.5	20.0	19.0	18.3
	Input power *3	W	10.7k	10.7k	10.7k	12.0k	12.0k	12.0k
	COP *3	(W / W)	4.21	4.21	4.21	4.17	4.17	4.17
	Power factor *3	%	90	90	90	91	91	91
	ηs,h *4	%	162.1			149.3		
Max Current (A) / Max Input power (W)			30.0 / 17.8k	30.0 / 18.7k	30.0 / 19.4k	32.0 / 19.4k	32.0 / 20.4k	32.0 / 21.2k
Starting current (A)			2	2	2	2	2	2
Time Delay fuse max size (A)			40			40		
Fan motor output		W / Pole number	750 / 8			750 / 8		
External static pressure		Pa	80			80		
Air flow		m^3/ min	232			232		
Refrigerant type / amount g			R410A / 8.3k			R410A / 8.3k		
Product dimension		Height mm	1842			1842		
		Width mm	1180			1180		
		Depth mm	1000			1000		
Packing dimension		Height mm	1977			1977		
		Width mm	1280			1280		
		Depth mm	1100			1100		
Weight		(NET) kg	334			334		
		(GROSS) kg	354			354		
Layers limit			1			1		
Operation condition (Outdoor)		Cool (DBT)	-10°C ~ 52°C			-10°C ~ 52°C		
		Heat (WBT)	-20°C ~ 18°C			-20°C ~ 18°C		
		Cool & Heat (DBT)	-10°C ~ 24°C			-10°C ~ 24°C		
MAX. WORKING PRESSURE		High side bar (MPa)	38.0 (3.80)			38.0 (3.80)		
		Low side bar (MPa)	31.1 (3.11)			31.1 (3.11)		
PIPING	Pipe diameter mm (inch) (Under 90m for ultimate Indoor unit)		(Liquid) 12.7 (1/2) (Discharge) 22.22 (7/8) (Suction) 25.4 (1inch)			(Liquid) 12.7 (1/2) (Discharge) 22.22 (7/8) (Suction) 28.58 (1-1/8)		
	Pipe diameter mm (inch) *1 (Over 90m for ultimate Indoor unit)		(Liquid) 15.88 (5/8) (Discharge) 25.4 (1inch) (Suction) 28.58 (1-1/8)			(Liquid) 15.88 (5/8) (Discharge) 25.4 (1inch) (Suction) 31.75 (1-1/4)		
	Balance pipe mm (inch)		6.35 (1/4)			6.35 (1/4)		
	Connecting method		(Balance) & (Liquid)flared type, (Suction) & (Discharge) brazing connection			(Balance) & (Liquid) flared type, (Suction) & (Discharge) brazing connection		
	Max tubing length	Actual length m	7.5	~	200	7.5	~	200
		Equivalent length m	7.5	~	210	7.5	~	210
	Total Max tubing length m		7.5	~	500	7.5	~	500
	Indoor unit & Outdoor unit height difference (Outdoor unit upper / Outdoor unit Lower) m		50 / 40			50 / 40		
Max connectable indoor units pcs.			27 (34*2)			30 (39 *2)		
Max allowable indoor/outdoor capacity ratio %			50 ~ 150			50 ~ 150		

*1: If the longest tubing equivalent length exceeds 90m, increase the sizes of the main tubes by 1 rank for suction tubes , discharge tubes and liquid tubes.
*2: In case that all connected indoor unit are only mini cassette (Y type), wall mounted (K type) and slim duct (M type), maximum number of indoor unit is able to increase (Able to apply bigger value). If one or more another indoor unit is conneced, maximum number of indoor unit is smaller value.
*3: Indoor units combination of performance test, 14HP: S-22MF2E5×10 + S-90MF2E5×1 + S-106MF2E5×1
Measured according with EN14511. 16HP: S-22MF2E5×9 + S-60MF2E5×1 + S-106MF2E5×2
*4: Measured according with EN14825.
The number of max connectable outdoor units are 3.
Necessary amount of additional refrigerant charge per outdoor unit, for 8HP or 10HP is 6.0kg, for 12HP or 14HP or 16HP is 7.4kg.
Max total refrigerant amount of 1 outdoor unit is 50kg, for 2 outdoor units is 80kg, for 3 outdoor units is 100kg.

1. Outdoor Unit

1-1. Specifications

Unit specifications (3)

OUTDOOR		MODEL	U-8MF3E8 U-10MF3E8			U-8MF3E8 U-12MF3E8			U-10MF3E8 U-12MF3E8		
Performance test condition			EN14511, EN14825			EN14511, EN14825			EN14511, EN14825		
Power supply		Ø,Hz	3Ø, 380-400-415V, 50Hz			3Ø, 380-400-415V, 50Hz			3Ø, 380-400-415V, 50Hz		
		V	380	400	415	380	400	415	380	400	415
COOLING	Capacity *3	kW	50.0	50.0	50.0	56.0	56.0	56.0	61.5	61.5	61.5
		BTU/h	170600	170600	170600	191100	191100	191100	209900	209900	209900
	Current *3	A	16.8	16.0	15.4	21.0	20.0	19.2	23.7	22.5	21.7
	Input power *3	W	10.2k	10.2k	10.2k	13.0k	13.0k	13.0k	14.5k	14.5k	14.5k
	EER *3	(W/W)	4.90	4.90	4.90	4.31	4.31	4.31	4.24	4.24	4.24
	Power factor *3	%	92	92	92	94	94	94	93	93	93
	ηs,c	%	-			-			-		
	Noise outdoor *3	dB-A (Normal)	59.0			61.0			62.0		
		Power Level dB (Normal)	80.5			82.5			83.0		
		dB-A (Silent 1)	56.0			58.0			59.0		
		dB-A (Silent 2)	54.0			56.0			57.0		
HEATING	Capacity *3	kW	56.0	56.0	56.0	63.0	63.0	63.0	69.0	69.0	69.0
		BTU/h	191100	191100	191100	215000	215000	215000	235500	235500	235500
	Current *3	A	17.7	16.8	16.2	21.3	20.3	19.5	23.5	22.3	21.5
	Input power *3	W	10.7k	10.7k	10.7k	13.2k	13.2k	13.2k	14.4k	14.4k	14.4k
	COP *3	(W / W)	5.23	5.23	5.23	4.77	4.77	4.77	4.79	4.79	4.79
	Power factor *3	%	92	92	92	94	94	94	93	93	93
	ηs,h	%	-			-			-		
Max Current (A) / Max Input power (W)			32.0 / 19.4k	32.0 / 20.4k	32.0 / 21.2k	34.0 / 21.0k	34.0 / 22.0k	34.0 / 22.9k	38.0 / 23.2k	38.0 / 24.3k	38.0 / 25.3k
Starting current (A)			1+1	1+1	1+1	1+1	1+1	1+1	1+1	1+1	1+1
Time Delay fuse max size (A)			-			-			-		
Fan motor output		W / Pole number	750+750 / 8			750+750 / 8			750+750 / 8		
External static pressure		Pa	80			80			80		
Air flow		m^3/ min	210+220			210+232			220+232		
Refrigerant type / amount g			R410A / 13.6k			R410A / 15.1k			R410A / 15.1k		
Product dimension		Height mm	1842			1842			1842		
		Width mm	(1180)+(1180)+60			(1180)+(1180)+60			(1180)+(1180)+60		
		Depth mm	1000			1000			1000		
Packing dimension		Height mm	-			-			-		
		Width mm	-			-			-		
		Depth mm	-			-			-		
Weight		(NET) kg	(261)+(262)			(261)+(286)			(262)+(286)		
		(GROSS) kg	-			-			-		
Layers limit			-			-			-		
Operation condition (Outdoor)		Cool (DBT)	-10°C ~ 52°C			-10°C ~ 52°C			-10°C ~ 52°C		
		Heat (WBT)	-20°C ~ 18°C			-20°C ~ 18°C			-20°C ~ 18°C		
		Cool & Heat (DBT)	-10°C ~ 24°C			-10°C ~ 24°C			-10°C ~ 24°C		
MAX. WORKING PRESSURE		High side bar (MPa)	38.0 (3.80)			38.0 (3.80)			38.0 (3.80)		
		Low side bar (MPa)	31.1 (3.11)			31.1 (3.11)			31.1 (3.11)		
PIPING	Pipe diameter mm (inch) (Under 90m for ultimate Indoor unit)		(Liquid) 15.88 (5/8) (Discharge) 22.22 (7/8) (Suction) 28.58 (1-1/8)			(Liquid) 15.88 (5/8) (Discharge) 22.22 (7/8) (Suction) 28.58 (1-1/8)			(Liquid) 15.88 (5/8) (Discharge) 25.4 (1inch) (Suction) 28.58 (1-1/8)		
	Pipe diameter mm (inch) *1 (Over 90m for ultimate Indoor unit)		(Liquid) 19.05 (3/4) (Discharge) 25.4 (1inch) (Suction) 31.75 (1-1/4)			(Liquid) 19.05 (3/4) (Discharge) 25.4 (1inch) (Suction) 31.75 (1-1/4)			(Liquid) 19.05 (3/4) (Discharge) 28.58 (1-1/8) (Suction) 31.75 (1-1/4)		
	Balance pipe mm (inch)		6.35 (1/4)			6.35 (1/4)			6.35 (1/4)		
	Connecting method		-			-			-		
	Max tubing length	Actual length m	7.5	~	200	7.5	~	200	7.5	~	200
		Equivalent length m	7.5	~	210	7.5	~	210	7.5	~	210
	Total Max tubing length m		7.5	~	500	7.5	~	500	7.5	~	500
	Indoor unit & Outdoor unit height difference (Outdoor unit upper / Outdoor unit Lower) m		50 / 40			50 / 40			50 / 40		
Max connectable indoor units pcs.			34 (43 *2)			38 (48 *2)			41 (52 *2)		
Max allowable indoor/outdoor capacity ratio %			50 ~ 150			50 ~ 150			50 ~ 150		

*1: If the longest tubing equivalent length exceeds 90m, increase the sizes of the main tubes by 1 rank for suction tubes , discharge tubes and liquid tubes.
*2: In case that all connected indoor unit are only mini cassette (Y type), wall mounted (K type) and slim duct (M type), maximum number of indoor unit is able to increase (Able to apply bigger value). If one or more another indoor unit is conneced, maximum number of indoor unit is smaller value.
*3: Measured according with EN14511.
The number of max connectable outdoor units are 3.
Necessary amount of additional refrigerant charge per outdoor unit, for 8HP or 10HP is 6.0kg, for 12HP or 14HP or 16HP is 7.4kg.
Max total refrigerant amount of 1 outdoor unit is 50kg, for 2 outdoor units is 80kg, for 3 outdoor units is 100kg.

1. Outdoor Unit

1-1. Specifications

Unit specifications (4)

OUTDOOR		MODEL	U-12MF3E8 U-12MF3E8			U-10MF3E8 U-16MF3E8			U-12MF3E8 U-16MF3E8		
Performance test condition			EN14511, EN14825			EN14511, EN14825			EN14511, EN14825		
Power supply		Ø,Hz	3Ø, 380-400-415V, 50Hz			3Ø, 380-400-415V, 50Hz			3Ø, 380-400-415V, 50Hz		
		V	380	400	415	380	400	415	380	400	415
COOLING	Capacity *3	kW	68.0	68.0	68.0	73.0	73.0	73.0	78.5	78.5	78.5
		BTU/h	232100	232100	232100	249100	249100	249100	267900	267900	267900
	Current *3	A	28.3	26.9	25.9	31.0	29.5	28.4	35.1	33.4	32.2
	Input power *3	W	17.5k	17.5k	17.5k	18.8k	18.8k	18.8k	21.5k	21.5k	21.5k
	EER *3	(W/W)	3.89	3.89	3.89	3.88	3.88	3.88	3.65	3.65	3.65
	Power factor *3	%	94	94	94	92	92	92	93	93	93
	ηs,c	%	-			-			-		
	Noise outdoor *3	dB-A (Normal)	63.0			63.5			64.5		
		Power Level dB (Normal)	84.0			83.5			84.5		
		dB-A (Silent 1)	60.0			60.5			61.5		
		dB-A (Silent 2)	58.0			58.5			59.5		
HEATING	Capacity *3	kW	76.5	76.5	76.5	81.5	81.5	81.5	87.5	87.5	87.5
		BTU/h	261100	261100	261100	278200	278200	278200	298600	298600	298600
	Current *3	A	27.6	26.3	25.3	30.2	28.7	27.7	33.5	31.8	30.7
	Input power *3	W	17.1k	17.1k	17.1k	18.1k	18.1k	18.1k	20.3k	20.3k	20.3k
	COP *3	(W / W)	4.47	4.47	4.47	4.50	4.50	4.50	4.31	4.31	4.31
	Power factor *3	%	94	94	94	91	91	91	92	92	92
	ηs,h	%	-			-			-		
Max Current (A) / Max Input power (W)			40.0 / 24.8k	40.0 / 26.0k	40.0 / 27.0k	50.0 / 30.2k	50.0 / 31.7k	50.0 / 33.0k	52.0 / 31.8k	52.0 / 33.4k	52.0 / 34.7k
Starting current (A)			1+1	1+1	1+1	1+2	1+2	1+2	1+2	1+2	1+2
Time Delay fuse max size (A)			-			-			-		
Fan motor output		W / Pole number	750+750 / 8			750+750 / 8			750+750 / 8		
External static pressure		Pa	80			80			80		
Air flow		m^3/ min	232+232			220+232			232+232		
Refrigerant type / amount g			R410A / 16.6k			R410A / 15.1k			R410A / 16.6k		
Product dimension		Height mm	1842			1842			1842		
		Width mm	(1180)+(1180)+60			(1180)+(1180)+60			(1180)+(1180)+60		
		Depth mm	1000			1000			1000		
Packing dimension		Height mm	-			-			-		
		Width mm	-			-			-		
		Depth mm	-			-			-		
Weight		(NET) kg	(286)+(286)			(262)+(334)			(286)+(334)		
		(GROSS) kg	-			-			-		
Layers limit			-			-			-		
Operation condition (Outdoor)		Cool (DBT)	-10°C ~ 52°C			-10°C ~ 52°C			-10°C ~ 52°C		
		Heat (WBT)	-20°C ~ 18°C			-20°C ~ 18°C			-20°C ~ 18°C		
		Cool & Heat (DBT)	-10°C ~ 24°C			-10°C ~ 24°C			-10°C ~ 24°C		
MAX. WORKING PRESSURE		High side bar (MPa)	38.0 (3.80)			38.0 (3.80)			38.0 (3.80)		
		Low side bar (MPa)	31.1 (3.11)			31.1 (3.11)			31.1 (3.11)		
PIPING	Pipe diameter mm (inch) (Under 90m for ultimate Indoor unit)		(Liquid) 15.88 (5/8) (Discharge) 25.4 (1inch) (Suction) 28.58 (1-1/8)			(Liquid) 19.05 (3/4) (Discharge) 25.4 (1inch) (Suction) 31.75 (1-1/4)			(Liquid) 19.05 (3/4) (Discharge) 28.58 (1-1/8) (Suction) 31.75 (1-1/4)		
	Pipe diameter mm (inch) *1 (Over 90m for ultimate Indoor unit)		(Liquid) 19.05 (3/4) (Discharge) 28.58 (1-1/8) (Suction) 31.75 (1-1/4)			(Liquid) 22.22 (7/8) (Discharge) 28.58 (1-1/8) (Suction) 38.1 (1-1/2)			(Liquid) 22.22 (7/8) (Discharge) 31.75 (1-1/4) (Suction) 38.1 (1-1/2)		
	Balance pipe mm (inch)		6.35 (1/4)			6.35 (1/4)			6.35 (1/4)		
	Connecting method		-			-			-		
	Max tubing length	Actual length m	7.5	~	200	7.5	~	200	7.5	~	200
		Equivalent length m	7.5	~	210	7.5	~	210	7.5	~	210
	Total Max tubing length m		7.5	~	500	7.5	~	500	7.5	~	500
	Indoor unit & Outdoor unit height difference (Outdoor unit upper / Outdoor unit Lower) m		50 / 40			50 / 40			50 / 40		
Max connectable indoor units pcs.			46 (52 *2)			49 (52 *2)			52		
Max allowable indoor/outdoor capacity ratio %			50 ~ 150			50 ~ 150			50 ~ 150		

*1: If the longest tubing equivalent length exceeds 90m, increase the sizes of the main tubes by 1 rank for suction tubes , discharge tubes and liquid tubes.
*2: In case that all connected indoor unit are only mini cassette (Y type), wall mounted (K type) and slim duct (M type), maximum number of indoor unit is able to increase (Able to apply bigger value). If one or more another indoor unit is conneced, maximum number of indoor unit is smaller value.
*3: Measured according with EN14511.
The number of max connectable outdoor units are 3.
Necessary amount of additional refrigerant charge per outdoor unit, for 8HP or 10HP is 6.0kg, for 12HP or 14HP or 16HP is 7.4kg.
Max total refrigerant amount of 1 outdoor unit is 50kg, for 2 outdoor units is 80kg, for 3 outdoor units is 100kg.

1. Outdoor Unit

1-1. Specifications

Unit specifications (5)

OUTDOOR		MODEL	U-14MF3E8 U-16MF3E8			U-16MF3E8 U-16MF3E8			U-8MF3E8 U-10MF3E8 U-16MF3E8		
Performance test condition			EN14511, EN14825			EN14511, EN14825			EN14511, EN14825		
Power supply		Ø,Hz	3Ø, 380-400-415V, 50Hz			3Ø, 380-400-415V, 50Hz			3Ø, 380-400-415V, 50Hz		
		V	380	400	415	380	400	415	380	400	415
COOLING	Capacity *3	kW	85.0	85.0	85.0	90.0	90.0	90.0	96.0	96.0	96.0
		BTU/h	290100	290100	290100	307200	307200	307200	327600	327600	327600
	Current *3	A	39.6	37.6	36.2	42.6	40.5	39.0	38.6	36.7	35.4
	Input power *3	W	23.7k	23.7k	23.7k	25.8k	25.8k	25.8k	23.4k	23.4k	23.4k
	EER *3	(W/W)	3.59	3.59	3.59	3.49	3.49	3.49	4.10	4.10	4.10
	Power factor *3	%	91	91	91	92	92	92	92	92	92
	ηs,c	%	-			-			-		
	Noise outdoor *3	dB-A (Normal)	64.5			65.0			64.0		
		Power Level dB (Normal)	85.0			85.0			84.5		
		dB-A (Silent 1)	61.5			62.0			61.0		
		dB-A (Silent 2)	59.5			60.0			59.0		
HEATING	Capacity *3	kW	95.0	95.0	95.0	100	100	100	108	108	108
		BTU/h	324200	324200	324200	341300	341300	341300	368600	368600	368600
	Current *3	A	37.9	36.0	34.7	40.1	38.1	36.7	38.9	37.0	35.6
	Input power *3	W	22.7k	22.7k	22.7k	24.0k	24.0k	24.0k	23.3k	23.3k	23.3k
	COP *3	(W / W)	4.19	4.19	4.19	4.17	4.17	4.17	4.64	4.64	4.64
	Power factor *3	%	91	91	91	91	91	91	91	91	91
	ηs,h	%	-			-			-		
Max Current (A) / Max Input power (W)			62.0 / 37.2k	62.0 / 39.1k	62.0 / 40.6k	64.0 / 38.8k	64.0 / 40.8k	64.0 / 42.4k	64.0 / 38.8k	64.0 / 40.8k	64.0 / 42.4k
Starting current (A)			2+2	2+2	2+2	2+2	2+2	2+2	1+1+2	1+1+2	1+1+2
Time Delay fuse max size (A)			-			-			-		
Fan motor output		W / Pole number	750+750 / 8			750+750 / 8			750+750+750 / 8		
External static pressure		Pa	80			80			80		
Air flow		m^3/ min	232+232			232+232			210+220+232		
Refrigerant type / amount g			R410A / 16.6k			R410A / 16.6k			R410A / 21.9k		
Product dimension		Height mm	1842			1842			1842		
		Width mm	(1180)+(1180)+60			(1180)+(1180)+60			(1180)+(1180)+(1180)+60+60		
		Depth mm	1000			1000			1000		
Packing dimension		Height mm	-			-			-		
		Width mm	-			-			-		
		Depth mm	-			-			-		
Weight		(NET) kg	(334)+(334)			(334)+(334)			(261)+(262)+(334)		
		(GROSS) kg	-			-			-		
Layers limit			-			-			-		
Operation condition (Outdoor)		Cool (DBT)	-10°C ~ 52°C			-10°C ~ 52°C			-10°C ~ 52°C		
		Heat (WBT)	-20°C ~ 18°C			-20°C ~ 18°C			-20°C ~ 18°C		
		Cool & Heat (DBT)	-10°C ~ 24°C			-10°C ~ 24°C			-10°C ~ 24°C		
MAX. WORKING PRESSURE		High side bar (MPa)	38.0 (3.80)			38.0 (3.80)			38.0 (3.80)		
		Low side bar (MPa)	31.1 (3.11)			31.1 (3.11)			31.1 (3.11)		
PIPING	Pipe diameter mm (inch) (Under 90m for ultimate Indoor unit)		(Liquid) 19.05 (3/4) (Discharge) 28.58 (1-1/8) (Suction) 31.75 (1-1/4)			(Liquid) 19.05 (3/4) (Discharge) 28.58 (1-1/8) (Suction) 31.75 (1-1/4)			(Liquid) 19.05 (3/4) (Discharge) 28.58 (1-1/8) (Suction) 31.75 (1-1/4)		
	Pipe diameter mm (inch) *1 (Over 90m for ultimate Indoor unit)		(Liquid) 22.22 (7/8) (Discharge) 31.75 (1-1/4) (Suction) 38.1 (1-1/2)			(Liquid) 22.22 (7/8) (Discharge) 31.75 (1-1/4) (Suction) 38.1 (1-1/2)			(Liquid) 22.22 (7/8) (Discharge) 31.75 (1-1/4) (Suction) 38.1 (1-1/2)		
	Balance pipe mm (inch)		6.35 (1/4)			6.35 (1/4)			6.35 (1/4)		
	Connecting method		-			-			-		
	Max tubing length	Actual length m	7.5	~	200	7.5	~	200	7.5	~	200
		Equivalent length m	7.5	~	210	7.5	~	210	7.5	~	210
	Total Max tubing length m		7.5	~	500	7.5	~	500	7.5	~	500
	Indoor unit & Outdoor unit height difference (Outdoor unit upper / Outdoor unit Lower) m		50 / 40			50 / 40			50 / 40		
Max connectable indoor units pcs.			52			52			52		
Max allowable indoor/outdoor capacity ratio %			50 ~ 150			50 ~ 150			50 ~ 150		

*1: If the longest tubing equivalent length exceeds 90m, increase the sizes of the main tubes by 1 rank for suction tubes , discharge tubes and liquid tubes.
*3: Measured according with EN14511.
The number of max connectable outdoor units are 3.
Necessary amount of additional refrigerant charge per outdoor unit, for 8HP or 10HP is 6.0kg, for 12HP or 14HP or 16HP is 7.4kg.
Max total refrigerant amount of 1 outdoor unit is 50kg, for 2 outdoor units is 80kg, for 3 outdoor units is 100kg.

1. Outdoor Unit

1-1. Specifications

Unit specifications (6)

OUTDOOR		MODEL	U-8MF3E8 U-12MF3E8 U-16MF3E8			U-10MF3E8 U-12MF3E8 U-16MF3E8			U-8MF3E8 U-16MF3E8 U-16MF3E8		
Performance test condition			EN14511, EN14825			EN14511, EN14825			EN14511, EN14825		
Power supply		Ø,Hz	3Ø, 380-400-415V, 50Hz			3Ø, 380-400-415V, 50Hz			3Ø, 380-400-415V, 50Hz		
		V	380	400	415	380	400	415	380	400	415
COOLING	Capacity *3	kW	101	101	101	107	107	107	113	113	113
		BTU/h	344700	344700	344700	365200	365200	365200	385700	385700	385700
	Current *3	A	42.3	40.2	38.7	45.6	43.3	41.7	50.2	47.7	46.0
	Input power *3	W	25.9k	25.9k	25.9k	27.6k	27.6k	27.6k	30.4k	30.4k	30.4k
	EER *3	(W/W)	3.90	3.90	3.90	3.88	3.88	3.88	3.72	3.72	3.72
	Power factor *3	%	93	93	93	92	92	92	92	92	92
	ηs,c	%	-			-			-		
	Noise outdoor *3	dB-A (Normal)	64.5			65.0			65.5		
		Power Level dB (Normal)	85.5			85.5			85.5		
		dB-A (Silent 1)	61.5			62.0			62.5		
		dB-A (Silent 2)	59.5			60.0			60.5		
HEATING	Capacity *3	kW	113	113	113	119	119	119	127	127	127
		BTU/h	385700	385700	385700	406100	406100	406100	433400	433400	433400
	Current *3	A	41.6	39.5	38.1	43.6	41.4	39.9	49.3	46.8	45.1
	Input power *3	W	25.2k	25.2k	25.2k	26.4k	26.4k	26.4k	29.5k	29.5k	29.5k
	COP *3	(W / W)	4.48	4.48	4.48	4.51	4.51	4.51	4.31	4.31	4.31
	Power factor *3	%	92	92	92	92	92	92	91	91	91
	ηs,h	%	-			-			-		
Max Current (A) / Max Input power (W)			66.0 / 40.4k	66.0 / 42.4k	66.0 / 44.1k	70.0 / 42.6k	70.0 / 44.7k	70.0 / 46.5k	78.0 / 47.4k	78.0 / 49.8k	78.0 / 51.8k
Starting current (A)			1+1+2	1+1+2	1+1+2	1+1+2	1+1+2	1+1+2	1+2+2	1+2+2	1+2+2
Time Delay fuse max size (A)			-			-			-		
Fan motor output		W / Pole number	750+750+750 / 8			750+750+750 / 8			750+750+750 / 8		
External static pressure		Pa	80			80			80		
Air flow		m^3/ min	210+232+232			220+232+232			210+232+232		
Refrigerant type / amount g			R410A / 23.4k			R410A / 23.4k			R410A / 23.4k		
Product dimension		Height mm	1842			1842			1842		
		Width mm	(1180)+(1180)+(1180)+60+60			(1180)+(1180)+(1180)+60+60			(1180)+(1180)+(1180)+60+60		
		Depth mm	1000			1000			1000		
Packing dimension		Height mm	-			-			-		
		Width mm	-			-			-		
		Depth mm	-			-			-		
Weight		(NET) kg	(261)+(286)+(334)			(262)+(286)+(334)			(261)+(334)+(334)		
		(GROSS) kg	-			-			-		
Layers limit			-			-			-		
Operation condition (Outdoor)		Cool (DBT)	-10°C ~ 52°C			-10°C ~ 52°C			-10°C ~ 52°C		
		Heat (WBT)	-20°C ~ 18°C			-20°C ~ 18°C			-20°C ~ 18°C		
		Cool & Heat (DBT)	-10°C ~ 24°C			-10°C ~ 24°C			-10°C ~ 24°C		
MAX. WORKING PRESSURE		High side bar (MPa)	38.0 (3.80)			38.0 (3.80)			38.0 (3.80)		
		Low side bar (MPa)	31.1 (3.11)			31.1 (3.11)			31.1 (3.11)		
PIPING	Pipe diameter mm (inch) (Under 90m for ultimate Indoor unit)		(Liquid) 19.05 (3/4) (Discharge) 28.58 (1-1/8) (Suction) 38.1 (1-1/2)			(Liquid) 19.05 (3/4) (Discharge) 31.75 (1-1/4) (Suction) 38.1 (1-1/2)			(Liquid) 19.05 (3/4) (Discharge) 31.75 (1-1/4) (Suction) 38.1 (1-1/2)		
	Pipe diameter mm (inch) *1 (Over 90m for ultimate Indoor unit)		(Liquid) 22.22 (7/8) (Discharge) 31.75 (1-1/4) (Suction) 41.28 (1-5/8)			(Liquid) 22.22 (7/8) (Discharge) 38.1 (1-1/2) (Suction) 41.28 (1-5/8)			(Liquid) 22.22 (7/8) (Discharge) 38.1 (1-1/2) (Suction) 41.28 (1-5/8)		
	Balance pipe mm (inch)		6.35 (1/4)			6.35 (1/4)			6.35 (1/4)		
	Connecting method		-			-			-		
	Max tubing length	Actual length m	7.5	~	200	7.5	~	200	7.5	~	200
		Equivalent length m	7.5	~	210	7.5	~	210	7.5	~	210
	Total Max tubing length m		7.5	~	500	7.5	~	500	7.5	~	500
	Indoor unit & Outdoor unit height difference (Outdoor unit upper / Outdoor unit Lower) m		50 / 40			50 / 40			50 / 40		
Max connectable indoor units pcs.			52			52			52		
Max allowable indoor/outdoor capacity ratio %			50 ~ 150			50 ~ 150			50 ~ 150		

*1: If the longest tubing equivalent length exceeds 90m, increase the sizes of the main tubes by 1 rank for suction tubes , discharge tubes and liquid tubes.
*3: Measured according with EN14511.
The number of max connectable outdoor units are 3.
Necessary amount of additional refrigerant charge per outdoor unit, for 8HP or 10HP is 6.0kg, for 12HP or 14HP or 16HP is 7.4kg.
Max total refrigerant amount of 1 outdoor unit is 50kg, for 2 outdoor units is 80kg, for 3 outdoor units is 100kg.

1. Outdoor Unit

1-1. Specifications

Unit specifications (7)

OUTDOOR		MODEL	U-10MF3E8 U-16MF3E8 U-16MF3E8			U-12MF3E8 U-16MF3E8 U-16MF3E8			U-14MF3E8 U-16MF3E8 U-16MF3E8		
Performance test condition			EN14511, EN14825			EN14511, EN14825			EN14511, EN14825		
Power supply		Ø,Hz	3Ø, 380-400-415V, 50Hz			3Ø, 380-400-415V, 50Hz			3Ø, 380-400-415V, 50Hz		
		V	380	400	415	380	400	415	380	400	415
COOLING	Capacity *3	kW	118	118	118	124	124	124	130	130	130
		BTU/h	402700	402700	402700	423200	423200	423200	443700	443700	443700
	Current *3	A	52.4	49.7	47.9	56.5	53.7	51.8	61.1	58.1	56.0
	Input power *3	W	31.7k	31.7k	31.7k	34.6k	34.6k	34.6k	36.6k	36.6k	36.6k
	EER *3	(W/W)	3.72	3.72	3.72	3.58	3.58	3.58	3.55	3.55	3.55
	Power factor *3	%	92	92	92	93	93	93	91	91	91
	ηs,c	%	-			-			-		
	Noise outdoor *3	dB-A (Normal)	66.0			66.5			66.5		
		Power Level dB (Normal)	86.0			86.5			87.0		
		dB-A (Silent 1)	63.0			63.5			63.5		
		dB-A (Silent 2)	61.0			61.5			61.5		
HEATING	Capacity *3	kW	132	132	132	138	138	138	145	145	145
		BTU/h	450500	450500	450500	471000	471000	471000	494900	494900	494900
	Current *3	A	50.6	48.1	46.3	53.7	51.0	49.1	57.9	55.0	53.0
	Input power *3	W	30.3k	30.3k	30.3k	32.5k	32.5k	32.5k	34.7k	34.7k	34.7k
	COP *3	(W / W)	4.36	4.36	4.36	4.25	4.25	4.25	4.18	4.18	4.18
	Power factor *3	%	91	91	91	92	92	92	91	91	91
	ηs,h	%	-			-			-		
Max Current (A) / Max Input power (W)			82.0 / 49.6k	82.0 / 52.1k	82.0 / 54.2k	84.0 / 51.2k	84.0 / 53.8k	84.0 / 55.9k	94.0 / 56.6k	94.0 / 59.5k	94.0 / 61.8k
Starting current (A)			1+2+2	1+2+2	1+2+2	1+2+2	1+2+2	1+2+2	2+2+2	2+2+2	2+2+2
Time Delay fuse max size (A)			-			-			-		
Fan motor output		W / Pole number	750+750+750 / 8			750+750+750 / 8			750+750+750 / 8		
External static pressure		Pa	80			80			80		
Air flow		m^3/ min	220+232+232			232+232+232			232+232+232		
Refrigerant type / amount g			R410A / 23.4k			R410A / 24.9k			R410A / 24.9k		
Product dimension		Height mm	1842			1842			1842		
		Width mm	(1180)+(1180)+(1180)+60+60			(1180)+(1180)+(1180)+60+60			(1180)+(1180)+(1180)+60+60		
		Depth mm	1000			1000			1000		
Packing dimension		Height mm	-			-			-		
		Width mm	-			-			-		
		Depth mm	-			-			-		
Weight		(NET) kg	(262)+(334)+(334)			(286)+(334)+(334)			(334)+(334)+(334)		
		(GROSS) kg	-			-			-		
Layers limit			-			-			-		
Operation condition (Outdoor)		Cool (DBT)	-10°C ~ 52°C			-10°C ~ 52°C			-10°C ~ 52°C		
		Heat (WBT)	-20°C ~ 18°C			-20°C ~ 18°C			-20°C ~ 18°C		
		Cool & Heat (DBT)	-10°C ~ 24°C			-10°C ~ 24°C			-10°C ~ 24°C		
MAX. WORKING PRESSURE		High side bar (MPa)	38.0 (3.80)			38.0 (3.80)			38.0 (3.80)		
		Low side bar (MPa)	31.1 (3.11)			31.1 (3.11)			31.1 (3.11)		
PIPING	Pipe diameter mm (inch) (Under 90m for ultimate Indoor unit)		(Liquid) 19.05 (3/4) (Discharge) 31.75 (1-1/4) (Suction) 38.1 (1-1/2)			(Liquid) 19.05 (3/4) (Discharge) 31.75 (1-1/4) (Suction) 38.1 (1-1/2)			(Liquid) 19.05 (3/4) (Discharge) 31.75 (1-1/4) (Suction) 38.1 (1-1/2)		
	Pipe diameter mm (inch) *1 (Over 90m for ultimate Indoor unit)		(Liquid) 22.22 (7/8) (Discharge) 38.1 (1-1/2) (Suction) 41.28 (1-5/8)			(Liquid) 22.22 (7/8) (Discharge) 38.1 (1-1/2) (Suction) 41.28 (1-5/8)			(Liquid) 22.22 (7/8) (Discharge) 38.1 (1-1/2) (Suction) 41.28 (1-5/8)		
	Balance pipe mm (inch)		6.35 (1/4)			6.35 (1/4)			6.35 (1/4)		
	Connecting method		-			-			-		
	Max tubing length	Actual length m	7.5	~	200	7.5	~	200	7.5	~	200
		Equivalent length m	7.5	~	210	7.5	~	210	7.5	~	210
	Total Max tubing length m		7.5	~	500	7.5	~	500	7.5	~	500
	Indoor unit & Outdoor unit height difference (Outdoor unit upper / Outdoor unit Lower) m		50 / 40			50 / 40			50 / 40		
Max connectable indoor units pcs.			52			52			52		
Max allowable indoor/outdoor capacity ratio %			50 ~ 150			50 ~ 150			50 ~ 150		

*1: If the longest tubing equivalent length exceeds 90m, increase the sizes of the main tubes by 1 rank for suction tubes , discharge tubes and liquid tubes.
*3: Measured according with EN14511.
The number of max connectable outdoor units are 3.
Necessary amount of additional refrigerant charge per outdoor unit, for 8HP or 10HP is 6.0kg, for 12HP or 14HP or 16HP is 7.4kg.
Max total refrigerant amount of 1 outdoor unit is 50kg, for 2 outdoor units is 80kg, for 3 outdoor units is 100kg.

1. Outdoor Unit

1-1. Specifications

Unit specifications (8)

OUTDOOR		MODEL		U-16MF3E8 U-16MF3E8 U-16MF3E8								
Performance test condition				EN14511, EN14825								
Power supply		Ø,Hz		3Ø, 380-400-415V, 50Hz								
		V		380	400	415						
COOLING	Capacity *3	kW		135	135	135						
		BTU/h		460800	460800	460800						
	Current *3	A		63.9	60.7	58.5						
	Input power *3	W		38.7k	38.7k	38.7k						
	EER *3	(W/W)		3.49	3.49	3.49						
	Power factor *3	%		92	92	92						
	ηs,c	%		-								
	Noise outdoor *3	dB-A (Normal)		67.0								
		Power Level dB (Normal)		87.0								
		dB-A (Silent 1)		64.0								
		dB-A (Silent 2)		62.0								
HEATING	Capacity *3	kW		150	150	150						
		BTU/h		511900	511900	511900						
	Current *3	A		60.1	57.1	55.0						
	Input power *3	W		36.0k	36.0k	36.0k						
	COP *3	(W / W)		4.17	4.17	4.17						
	Power factor *3	%		91	91	91						
	ηs,h	%		-								
Max Current (A) / Max Input power (W)				96.0 / 58.2k	96.0 / 61.2k	96.0 / 63.6k						
Starting current (A)				2+2+2	2+2+2	2+2+2						
Time Delay fuse max size (A)				-								
Fan motor output		W / Pole number		750+750+750 / 8								
External static pressure		Pa		80								
Air flow		m^3/ min		232+232+232								
Refrigerant type / amount g				R410A / 24.9k								
Product dimension		Height	mm	1842								
		Width	mm	(1180)+(1180)+(1180)+60+60								
		Depth	mm	1000								
Packing dimension		Height	mm	-								
		Width	mm	-								
		Depth	mm	-								
Weight	(NET) kg			(334)+(334)+(334)								
	(GROSS) kg			-								
Layers limit				-								
Operation condition (Outdoor)		Cool (DBT)		-10°C ~ 52°C								
		Heat (WBT)		-20°C ~ 18°C								
		Cool & Heat (DBT)		-10°C ~ 24°C								
MAX. WORKING PRESSURE	High side bar (MPa)			38.0 (3.80)								
	Low side bar (MPa)			31.1 (3.11)								
PIPING	Pipe diameter mm (inch) (Under 90m for ultimate Indoor unit)			(Liquid) 19.05 (3/4) (Discharge) 31.75 (1-1/4) (Suction) 38.1 (1-1/2)								
	Pipe diameter mm (inch) *1 (Over 90m for ultimate Indoor unit)			(Liquid) 22.22 (7/8) (Discharge) 38.1 (1-1/2) (Suction) 41.28 (1-5/8)								
	Balance pipe mm (inch)			6.35 (1/4)								
	Connecting method			-								
	Max tubing length	Actual length m		7.5	~	200						
		Equivalent length m		7.5	~	210						
	Total Max tubing length m			7.5	~	500						
	Indoor unit & Outdoor unit height difference (Outdoor unit upper / Outdoor unit Lower) m			50 / 40								
Max connectable indoor units pcs.				52								
Max allowable indoor/outdoor capacity ratio %				50 ~ 150								

*1: If the longest tubing equivalent length exceeds 90m, increase the sizes of the main tubes by 1 rank for suction tubes , discharge tubes and liquid tubes.
*3: Measured according with EN14511.
The number of max connectable outdoor units are 3.
Necessary amount of additional refrigerant charge per outdoor unit, for 8HP or 10HP is 6.0kg, for 12HP or 14HP or 16HP is 7.4kg.
Max total refrigerant amount of 1 outdoor unit is 50kg, for 2 outdoor units is 80kg, for 3 outdoor units is 100kg.

1. Outdoor Unit

1-2. Dimensional Data

U-8MF3E8, U-10MF3E8, U-12MF3E8, U-14MF3E8, U-16MF3E8

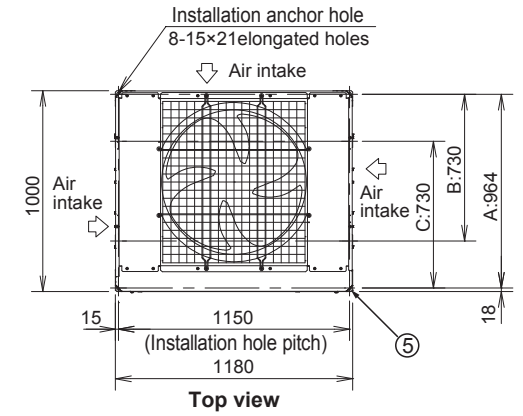

Top view

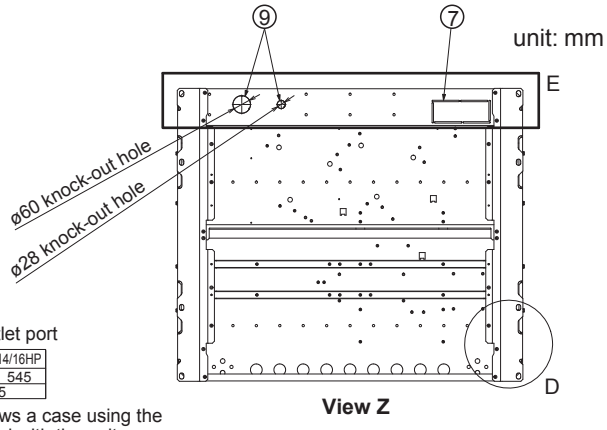

View Z

Dimension of Pressure outlet port

Types of unit	8HP	10HP	12HP	14/16HP
HP	496			545
LP	493	479	465	

• 8HP unit dimensions shows a case using the connection tubing supplied with the unit.

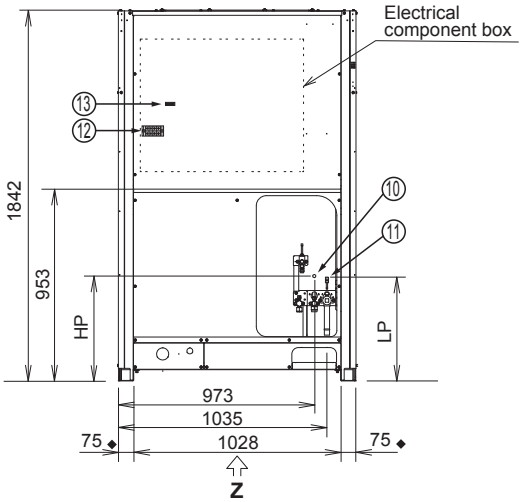

Front view

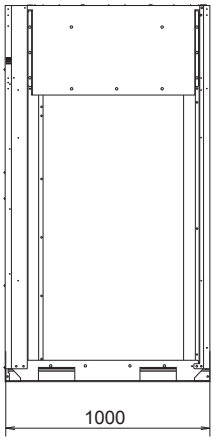

Side view

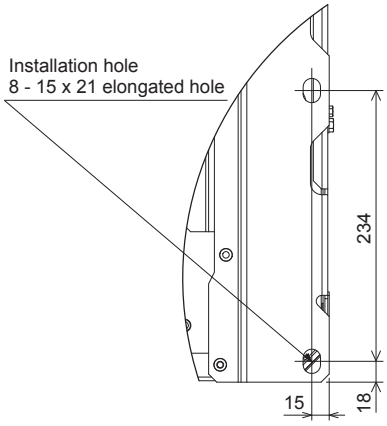

Enlarged view D

◆ Installation fixing bracket
Installation side

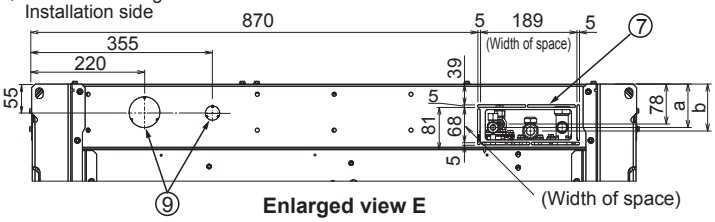

Enlarged view E

Dimension of refrigerant tubing port

Types of unit	8HP	10HP	12HP	14/16HP
a	85	86	84	85
b	92	92	90	90

• 8HP unit dimensions shows a case using the connection tubing supplied with the unit.

According to the installation site, you may choose the setting position in the depth direction of the anchor bolt from "A", "B" or "C".
A : 964 (Installation hole pitch) * The tubing is routed out from the front.
B : 730 (Installation hole pitch) * The tubing is routed out from the bottom.
C : 730 (Installation hole pitch)

	Types of unit	8HP	10HP	12HP	14HP	16HP
①	Refrigerant tubing (suction tube)	brazed connection				
		ø19.05	ø22.22	ø25.4	ø25.4	ø28.58
②	Refrigerant tubing (discharge tube)	flared connection	brazed connection			
		ø15.88	ø19.05	ø19.05	ø22.22	ø22.22
③	Refrigerant tubing (liquid tube)	flared connection				
		ø9.52	ø9.52	ø12.7	ø12.7	ø12.7
④	Refrigerant tubing (balance tube)	flared connection				
		ø6.35				
⑤	Installation holes(8-15x21 elongated holes), anchor bolts M12 or larger					
⑥	Refrigerant tubing port (front: knock-out hole)					
⑦	Refrigerant tubing port (bottom: slit hole)					
⑧	Electrical wiring port (front: ø60, ø28 knock-out hole - for conduit connection)					
⑨	Electrical wiring port (bottom: ø60, ø28 knock-out hole - for conduit connection)					
⑩	Pressure outlet port (for high pressure: ø7.94 Schrader-type connection)					
⑪	Pressure outlet port (for low pressure: ø7.94 Schrader-type connection)					
⑫	Terminal board for power supply					
⑬	Terminal board for inter-unit control wiring and/or inter-outdoor unit control wiring					

Position of refrigerant tube connection

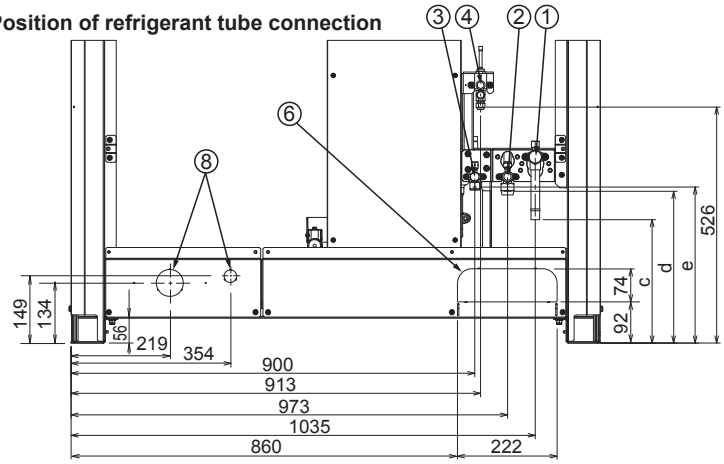

Dimension of refrigerant tube connecting position

Types of unit	8HP	10HP	12HP	14/16HP
c	275	248	216	216
d	338	338	336	275
e	348	348	339	336

• 8HP unit dimensions shows a case using the connection tubing supplied with the unit.

1. Outdoor Unit

1-3. Multiple Unit Installation Example

● **Diagrams for 18HP ~ 48HP**

Unit: mm

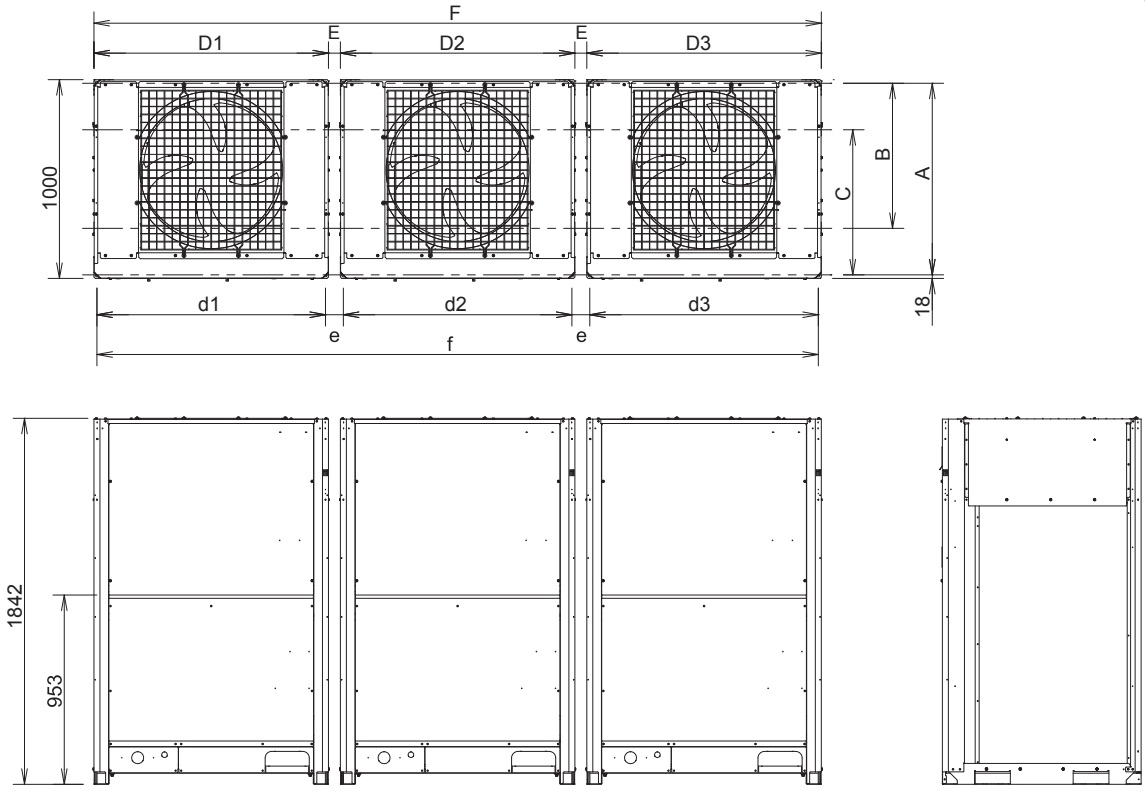

Capacity	Dimensions of single unit			Distance between units		Dimensions of combination unit		Dimensions of single unit installation hole			Distance between unit installation hole		Dimensions of combination unit installation hole	
	D1	D2	D3	E(*1)	E(*2)	F(*1)	F(*2)	d1	d2	d3	e(*1)	e(*2)	f(*1)	f(*2)
8HP	1180	—	—	—	—	1180	1180	1150	—	—	—	—	1150	1150
10HP	1180	—	—	—	—	1180	1180	1150	—	—	—	—	1150	1150
12HP	1180	—	—	—	—	1180	1180	1150	—	—	—	—	1150	1150
14HP	1180	—	—	—	—	1180	1180	1150	—	—	—	—	1150	1150
16HP	1180	—	—	—	—	1180	1180	1150	—	—	—	—	1150	1150
18HP	1180	1180	—	60	180	2420	2540	1150	1150	—	90	210	2390	2510
20HP	1180	1180	—	60	180	2420	2540	1150	1150	—	90	210	2390	2510
22HP	1180	1180	—	60	180	2420	2540	1150	1150	—	90	210	2390	2510
24HP	1180	1180	—	60	180	2420	2540	1150	1150	—	90	210	2390	2510
26HP	1180	1180	—	60	180	2420	2540	1150	1150	—	90	210	2390	2100
28HP	1180	1180	—	60	180	2420	2540	1150	1150	—	90	210	2390	2510
30HP	1180	1180	—	60	180	2420	2540	1150	1150	—	90	210	2390	2510
32HP	1180	1180	—	60	180	2420	2540	1150	1150	—	90	210	2390	2510
34HP	1180	1180	1180	60	180	3660	3900	1150	1150	1150	90	210	3630	3870
36HP	1180	1180	1180	60	180	3660	3900	1150	1150	1150	90	210	3630	3870
38HP	1180	1180	1180	60	180	3660	3900	1150	1150	1150	90	210	3630	3870
40HP	1180	1180	1180	60	180	3660	3900	1150	1150	1150	90	210	3630	3870
42HP	1180	1180	1180	60	180	3660	3900	1150	1150	1150	90	210	3630	3870
44HP	1180	1180	1180	60	180	3660	3900	1150	1150	1150	90	210	3630	3870
46HP	1180	1180	1180	60	180	3660	3900	1150	1150	1150	90	210	3630	3870
48HP	1180	1180	1180	60	180	3660	3900	1150	1150	1150	90	210	3630	3870

According to the installation site, you may choose the setting position in the depth direction of the anchor bolt from A, B or C.

A: 964: (Installation hole pitch) : For removing tube forward. Use the data with the asterisk (*1) in combination of each unit dimension.

B: 730: (Installation hole pitch) : For removing tube downward. Use the data with the asterisk (*2) in combination of each unit dimension.

C: 730: (Installation hole pitch) : Use the data with the asterisk (*2) in combination of each unit dimension.

1. Outdoor Unit

Position of center of gravity

U-8MF3E8, U-10MF3E8, U-12MF3E8, U-14MF3E8, U-16MF3E8

Unit: mm

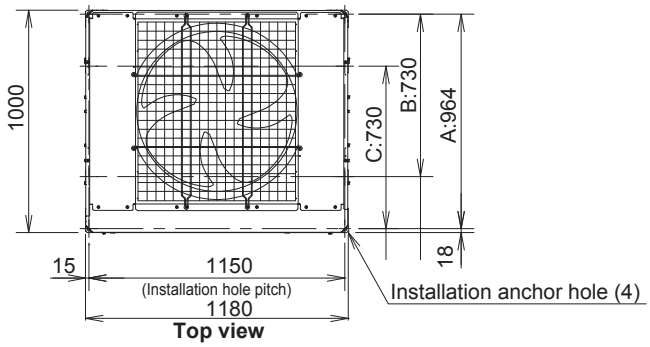

Position of center of gravity

Model	Position of center of gravity			Weight
	X	Y	Z	(kg)
U-8MF3E8	540	455	675	261
U-10MF3E8	540	455	675	262
U-12MF3E8	540	460	680	286
U-14MF3E8	560	445	635	334
U-16MF3E8	560	445	635	334

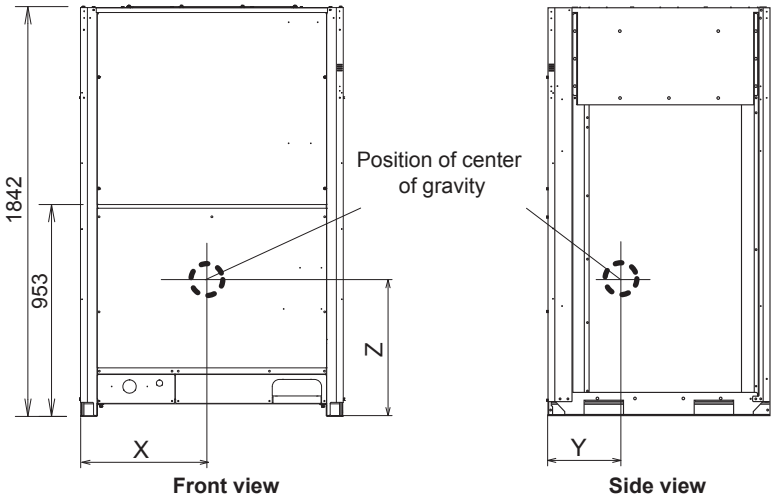

- According to the installation site, you may choose the setting position in the depth direction of the anchor bolt from "A", "B" or "C".

A : 964 (Installation hole pitch) * The tubing is routed out from the front.
B : 730 (Installation hole pitch) * The tubing is routed out from the bottom.
C : 730 (Installation hole pitch)

4

1. Outdoor Unit

1-4. Refrigerant Flow Diagram
U-8MF3E8, U-10MF3E8, U-12MF3E8

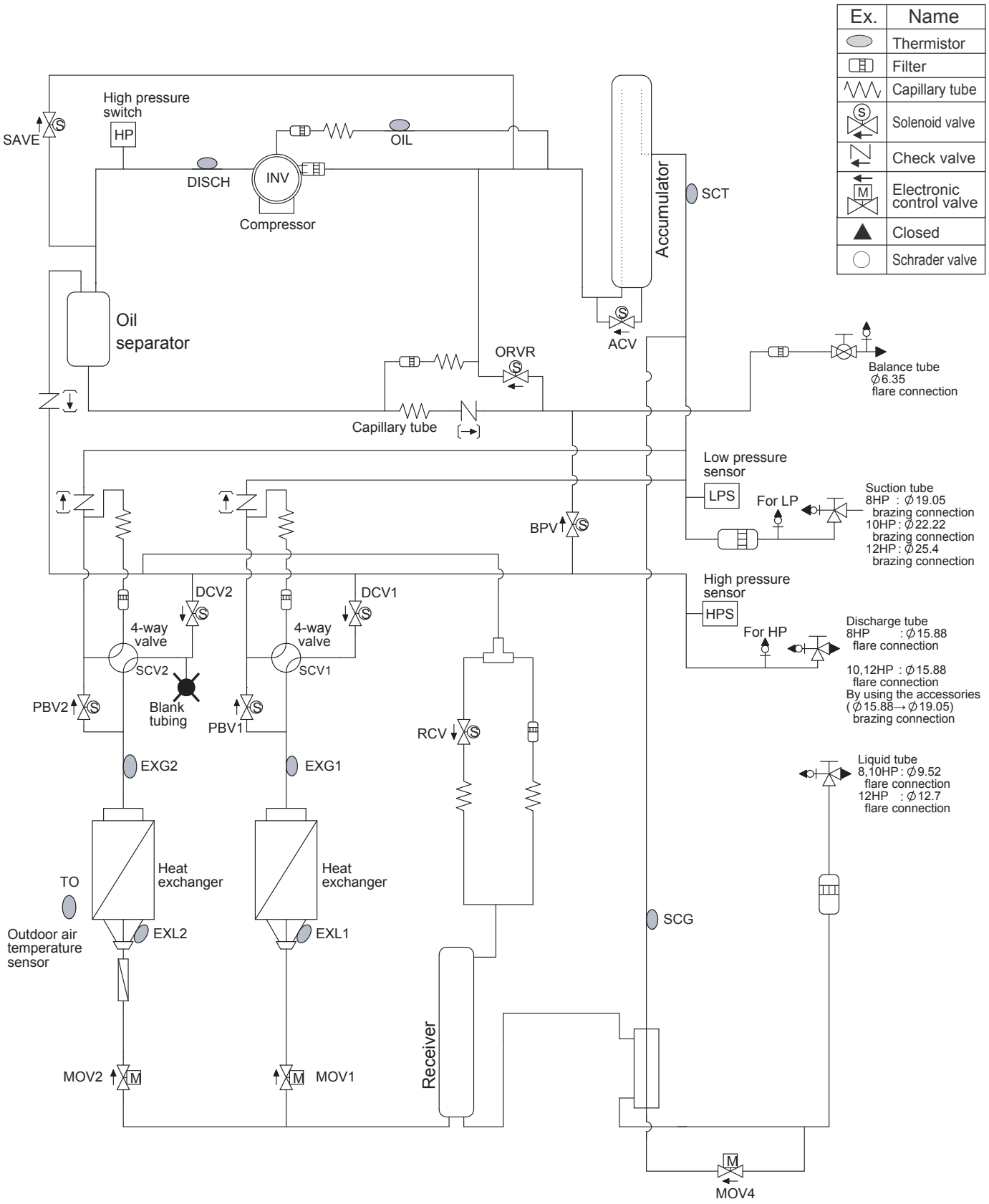

4

1. Outdoor Unit

1-4. Refrigerant Flow Diagram (continued)

U-14MF3E8, U-16MF3E8

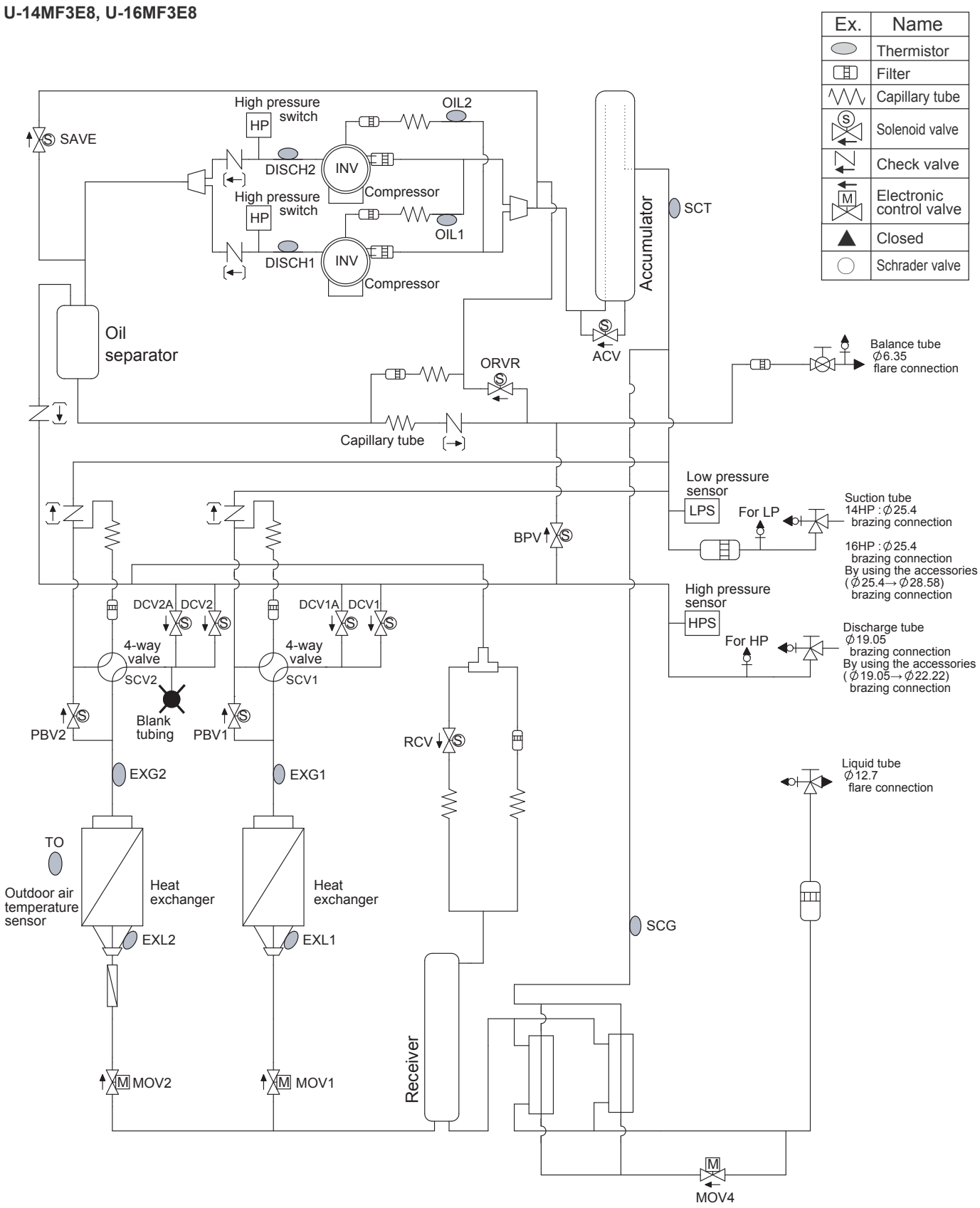

1. Outdoor Unit

1-5. Noise Criterion Curves

MODEL	U-8MF3E8
SOUND LEVEL dB(A) (Cooling/Heating)	54.0 (Quiet mode 51.0)
CONDITION	1 m in front at height of 1.5 m

Standard mode
Quiet mode

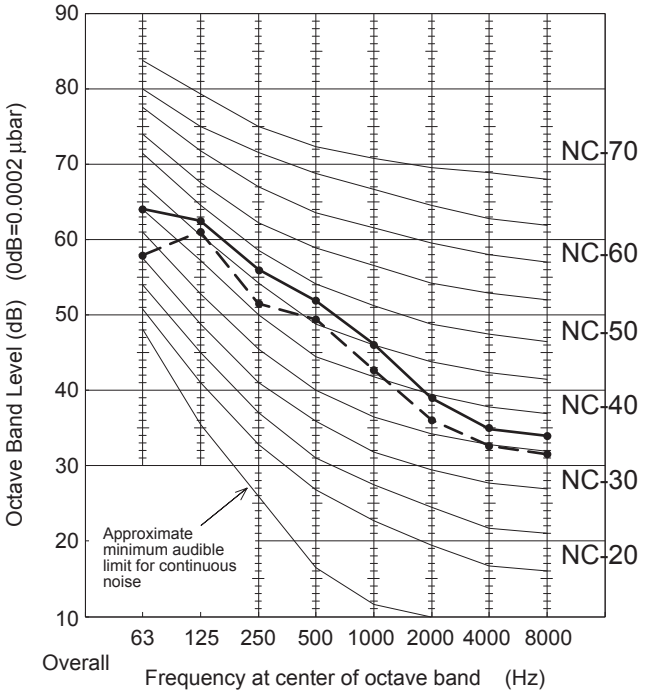

MODEL	U-10MF3E8
SOUND LEVEL dB(A) (Cooling/Heating)	57.0 (Quiet mode 54.0)
CONDITION	1 m in front at height of 1.5 m

Standard mode
Quiet mode

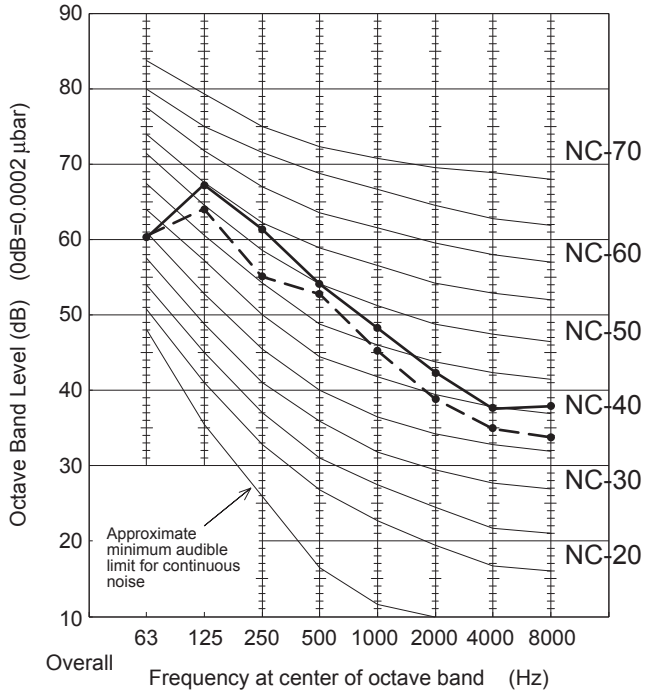

MODEL	U-12MF3E8
SOUND LEVEL dB(A) (Cooling/Heating)	60.0 (Quiet mode 57.0)
CONDITION	1 m in front at height of 1.5 m

Standard mode
Quiet mode

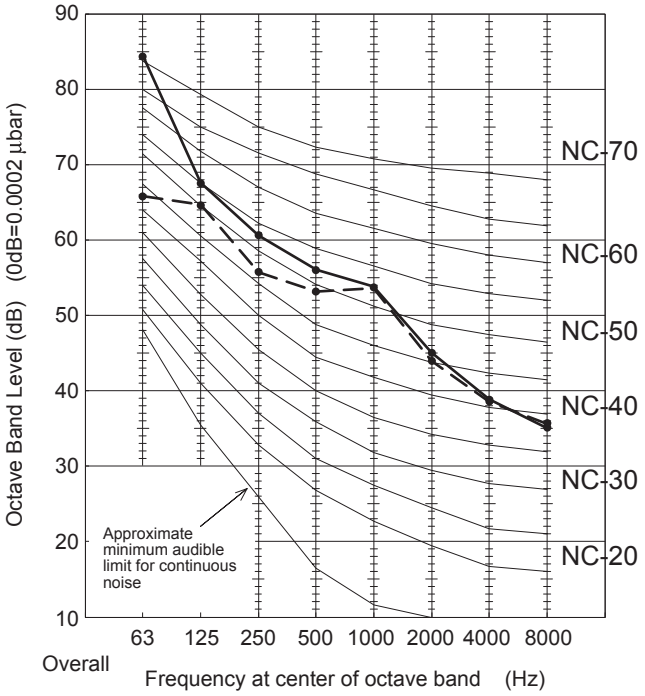

MODEL	U-14MF3E8
SOUND LEVEL dB(A) (Cooling/Heating)	61.0 (Quiet mode 58.0)
CONDITION	1 m in front at height of 1.5 m

Standard mode
Quiet mode

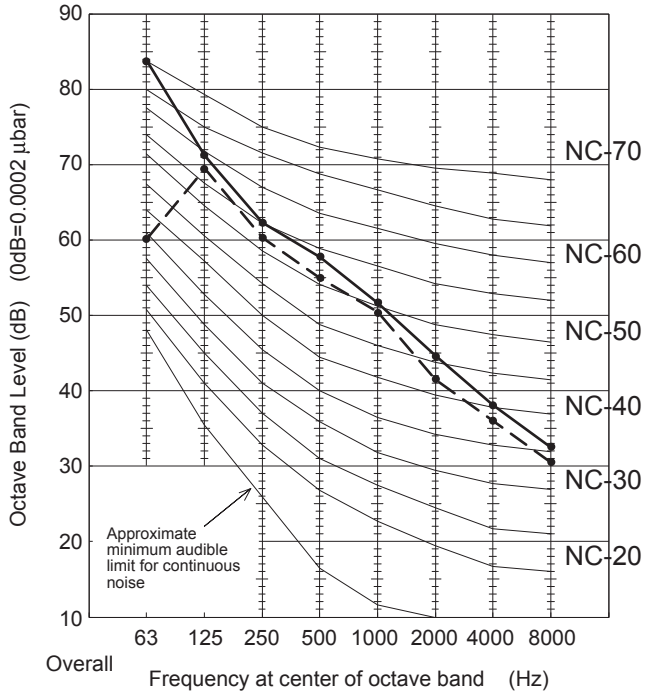

1. Outdoor Unit

1-5. Noise Criterion Curves

MODEL	U-16MF3E8
SOUND LEVEL dB(A) (Cooling/Heating)	62.0 (Quiet mode 59.0)
CONDITION	1 m in front at height of 1.5 m

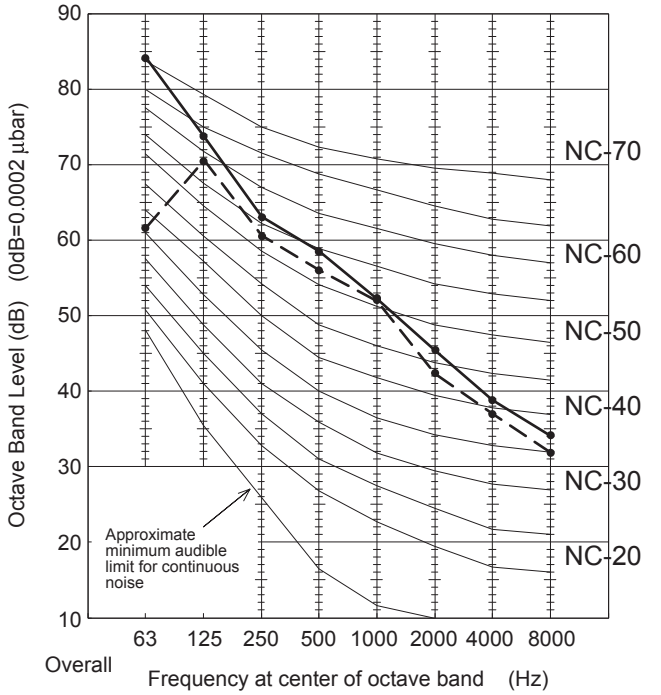

4

1. Outdoor Unit

1-6. Information Table

Information requirements for air-to-air air conditioners

Model(s):	Outdoor Unit	U-8MF3E8
	Indoor Unit	S-56MF2E5A x4
Outdoor side heat exchanger of air conditioner:		air
Indoor side heat exchanger of air conditioner:		air
Type: compressor driven vapour compression or sorption process		vapour compression
if applicable: driver of compressor: [electric motor or fuel driven, gaseous or liquid fuel, internal or external combustion engine]		electric motor

Item	Symbol	Value	Unit	Item	Symbol	Value	Unit
Rated cooling capacity	$P_{rated,c}$	22.4	kW	Seasonal space cooling energy efficiency	$\eta_{s,c}$	277.7	%
Declared cooling capacity for part load at given outdoor temperatures Tj and indoor 27°/19°C (dry/wet bulb)				Declared energy efficiency ratio or gas utilization efficiency / auxiliary energy factor for part load at given outdoor temperatures Tj			
Tj= + 35 °C	Pdc	22.4	kW	Tj = + 35 °C	EER_d or $GUE_{c,bin}$ / $AEF_{c,bin}$	3.1	%
Tj = + 30 °C		16.5	kW	Tj = + 30 °C		4.9	%
Tj = + 25 °C		10.6	kW	Tj = + 25 °C		9.1	%
Tj = + 20 °C		7.2	kW	Tj = + 20 °C		16.5	%
Degradation co- efficient for air conditioners**	C_{dc}	0.25	-				
Power consumption in modes other than 'active mode'							
Off mode	P_{OFF}	0.017	kW	Crankcase heater mode	P_{CK}	0.050	kW
Thermostat-off mode	P_{TO}	0.017	kW	Standby mode	P_{SB}	0.017	kW
Other items							
Capacity control		variable		For air-to-air air conditioner: air flow rate, outdoor		12336	m³/h
Sound power level, outdoor	L_{WA}	79.0	dB				
Sound power level, indoor	L_{WA}	- ****	dB	if engine driven: Emissions of nitrogen oxides	NO_x***	-	mg/kWh fuel input GCV
				GWP of the refrigerant		2088	kg CO_2 eq (100 years)
Contact details	Panasonic Testing Centre, Panasonic Marketing Europe GmbH Winsbergring 15, 22525 Hamburg, Germany						

** If C_{dc} is not determined by measurement then the default degradation coefficient air conditioners shall be 0,25.
*** from 26 September 2018.
Where information relates to multi-split air conditioners, the test result and performance data may be obtained on the basis of the performance of the outdoor unit, with a combination of indoor unit(s) recommended by the manufacturer or importer.
**** Refer to Information requirements for UnitList

Information requirements for heat pumps

Model(s):	Outdoor Unit	U-8MF3E8
	Indoor Unit	S-56MF2E5A x4
Outdoor side heat exchanger of heat pump:		air
Indoor side heat exchanger of heat pump:		air
Indication if the heater is equipped with a supplementary heater:		no
if applicable: driver of compressor: [electric motor or fuel driven, gaseous or liquid fuel, internal or external combustion engine]		electric motor

Parameters shall be declared for the average heating season, parameters for the warmer and colder heating seasons are optional.

Item	Symbol	Value	Unit	Item	Symbol	Value	Unit
Rated heating capacity	$P_{rated,h}$	25.0	kW	Seasonal space heating energy efficiency	$\eta_{s,h}$	190.9	%
Declared heating capacity for part load at indoor temperature 20 °C and outdoor temperature Tj				Declared coefficient of performance or gas utilization efficiency / auxiliary energy factor for part load at given outdoor temperatures Tj			
Tj = - 7 °C	P_{dh}	15.4	kW	Tj = - 7 °C	COP_d or $GUE_{h,bin}$ / $AEF_{h,bin}$	2.9	%
Tj = + 2 °C		9.4	kW	Tj = + 2 °C		4.6	%
Tj = + 7 °C		6.0	kW	Tj = + 7 °C		7.1	%
Tj = + 12 °C		6.7	kW	Tj = + 12 °C		8.7	%
T_{biv} = bivalent temperature		16.8	kW	T_{biv} = bivalent temperature		2.6	%
T_{OL} = operation limit		7.0	kW	T_{OL} = operation limit		1.3	%
For air-to-water heat pumps: Tj = - 15 °C (if T_{OL} < - 20 °C)		-	kW	For water-to-air heat pumps: T_j = - 15 °C (if T_{OL} < -20 °C)		-	%
Bivalent temperature	T_{biv}	-9	°C	For water-to-air heat pumps: Operation limit temperature	T_{OL}	-20	℃
Degradation co- efficient heat pumps**	C_{dh}	0.25	-				
Power consumption in modes other than 'active mode'				Supplementary heater			
Off mode	P_{OFF}	0.050	kW	back-up heating capacity *	elbu	1.6	kW
Thermostat-off mode	P_{TO}	0.050	kW	Type of energy input			
Crankcase heater mode	P_{CK}	0.050	kW	Standby mode	P_{SB}	0.050	kW
Other items							
Capacity control		variable		For air-to-air heat pumps: air flow rate,outdoor		10769	m³/h
Sound power level, outdoor	L_{WA}	77.0	dB	For water-/brine-to-air heat pumps: Rated brine or water flow rate, outdoor side heat exchanger		-	m³/h
Sound power level, indoor	L_{WA}	- ****	dB	Emissions of nitrogen oxides (if applicable)	NO_x***	-	mg/kWh fuel input GCV
				GWP of the refrigerant		2088	kg CO_2 eq (100 years)
Contact details	Panasonic Testing Centre, Panasonic Marketing Europe GmbH Winsbergring 15, 22525 Hamburg, Germany						

** If C_{dh} is not determined by measurement then the default degradation coefficient of heat pumps shall be 0,25.
*** from 26 September 2018.
Where information relates to multi-split heat pumps, the test result and performance data may be obtained on the basis of the performance of the outdoor unit, with a combination of indoor unit(s) recommended by the manufacturer or importer.
**** Refer to Information requirements for UnitList

Information requirements for air-to-air air conditioners

Model(s):	Outdoor Unit	U-8MF3E8
	Indoor Unit	S-56MD1E5 x4
Outdoor side heat exchanger of air conditioner:		air
Indoor side heat exchanger of air conditioner:		air
Type: compressor driven vapour compression or sorption process		vapour compression
if applicable: driver of compressor: [electric motor or fuel driven, gaseous or liquid fuel, internal or external combustion engine]		electric motor

Item	Symbol	Value	Unit	Item	Symbol	Value	Unit
Rated cooling capacity	$P_{rated,c}$	22.4	kW	Seasonal space cooling energy efficiency	$\eta_{s,c}$	235.9	%
Declared cooling capacity for part load at given outdoor temperatures Tj and indoor 27º/19ºC (dry/wet bulb)				Declared energy efficiency ratio or gas utilization efficiency / auxiliary energy factor for part load at given outdoor temperatures Tj			
Tj= + 35 ºC	Pdc	15.6	kW	Tj = + 35 ºC	EER_d or $GUE_{c,bin}$ / $AEF_{c,bin}$	3.1	%
Tj = + 30 ºC		11.4	kW	Tj = + 30 ºC		4.6	%
Tj = + 25 ºC		7.3	kW	Tj = + 25 ºC		8.2	%
Tj = + 20 ºC		6.1	kW	Tj = + 20 ºC		10.6	%
Degradation co- efficient for air conditioners**	C_{dc}	0.25	-				
Power consumption in modes other than 'active mode'							
Off mode	P_{OFF}	0.017	kW	Crankcase heater mode	P_{CK}	0.050	kW
Thermostat-off mode	P_{TO}	0.017	kW	Standby mode	P_{SB}	0.017	kW
Other items							
Capacity control		variable		For air-to-air air conditioner: air flow rate, outdoor		12336	m³/h
Sound power level, outdoor	L_{WA}	79.0	dB				
Sound power level, indoor	L_{WA}	- ****	dB	if engine driven: Emissions of nitrogen oxides	NO_x***	-	mg/kWh fuel input GCV
				GWP of the refrigerant		2088	kg CO_2 eq (100 years)
Contact details	Panasonic Testing Centre, Panasonic Marketing Europe GmbH Winsbergring 15, 22525 Hamburg, Germany						

** If C_{dc} is not determined by measurement then the default degradation coefficient air conditioners shall be 0,25.
*** from 26 September 2018.
Where information relates to multi-split air conditioners, the test result and performance data may be obtained on the basis of the performance of the outdoor unit, with a combination of indoor unit(s) recommended by the manufacturer or importer.
**** Refer to Information requirements for UnitList

Information requirements for heat pumps

Model(s):	Outdoor Unit	U-8MF3E8
	Indoor Unit	S-56MD1E5 x4
Outdoor side heat exchanger of heat pump:		air
Indoor side heat exchanger of heat pump:		air
Indication if the heater is equipped with a supplementary heater:		no
if applicable: driver of compressor: [electric motor or fuel driven, gaseous or liquid fuel, internal or external combustion engine]		electric motor

Parameters shall be declared for the average heating season, parameters for the warmer and colder heating seasons are optional.

Item	Symbol	Value	Unit	Item	Symbol	Value	Unit
Rated heating capacity	$P_{rated,h}$	25.0	kW	Seasonal space heating energy efficiency	$\eta_{s,h}$	153.6	%
Declared heating capacity for part load at indoor temperature 20 °C and outdoor temperature Tj				Declared coefficient of performance or gas utilization efficiency / auxiliary energy factor for part load at given outdoor temperatures Tj			
Tj = - 7 ºC	P_{dh}	13.2	kW	Tj = - 7 ºC	COP_d or $GUE_{h,bin}$ / $AEF_{h,bin}$	2.3	%
Tj = + 2 ºC		8.0	kW	Tj = + 2 ºC		3.7	%
Tj = + 7 ºC		5.1	kW	Tj = + 7 ºC		6.0	%
Tj = + 12 ºC		6.5	kW	Tj = + 12 ºC		7.2	%
T_{biv} = bivalent temperature		13.2	kW	T_{biv} = bivalent temperature		2.3	%
T_{OL} = operation limit		5.3	kW	T_{OL} = operation limit		1.1	%
For air-to-water heat pumps: Tj = - 15 ºC (if T_{OL} < - 20 ºC)		-	kW	For water-to-air heat pumps: T_j = - 15 ºC (if T_{OL} < -20 ºC)		-	%
Bivalent temperature	T_{biv}	-7	ºC	For water-to-air heat pumps: Operation limit temperature	T_{OL}	-20	℃
Degradation co- efficient heat pumps**	C_{dh}	0.25	-				
Power consumption in modes other than 'active mode'				Supplementary heater			
Off mode	P_{OFF}	0.050	kW	back-up heating capacity *	elbu	3.7	kW
Thermostat-off mode	P_{TO}	0.050	kW	Type of energy input			
Crankcase heater mode	P_{CK}	0.050	kW	Standby mode	P_{SB}	0.050	kW
Other items							
Capacity control		variable		For air-to-air heat pumps: air flow rate,outdoor		10769	m³/h
Sound power level, outdoor	L_{WA}	77.0	dB	For water-/brine-to-air heat pumps: Rated brine or water flow rate, outdoor side heat exchanger		-	m³/h
Sound power level, indoor	L_{WA}	- ****	dB	Emissions of nitrogen oxides (if applicable)	NO_x***	-	mg/kWh fuel input GCV
				GWP of the refrigerant		2088	kg CO_2 eq (100 years)
Contact details	Panasonic Testing Centre, Panasonic Marketing Europe GmbH Winsbergring 15, 22525 Hamburg, Germany						

** If C_{dh} is not determined by measurement then the default degradation coefficient of heat pumps shall be 0,25.
*** from 26 September 2018.
Where information relates to multi-split heat pumps, the test result and performance data may be obtained on the basis of the performance of the outdoor unit, with a combination of indoor unit(s) recommended by the manufacturer or importer.
**** Refer to Information requirements for UnitList

1. Outdoor Unit

Information requirements for air-to-air air conditioners

Model(s):	Outdoor Unit	U-10MF3E8
	Indoor Unit	S-73MF2E5A x4
Outdoor side heat exchanger of air conditioner:		air
Indoor side heat exchanger of air conditioner:		air
Type: compressor driven vapour compression or sorption process		vapour compression
if applicable: driver of compressor: [electric motor or fuel driven, gaseous or liquid fuel, internal or external combustion engine]		electric motor

Item	Symbol	Value	Unit	Item	Symbol	Value	Unit
Rated cooling capacity	$P_{rated,c}$	28.0	kW	Seasonal space cooling energy efficiency	$\eta_{s,c}$	278.9	%
Declared cooling capacity for part load at given outdoor temperatures Tj and indoor 27°/19°C (dry/wet bulb)				Declared energy efficiency ratio or gas utilization efficiency / auxiliary energy factor for part load at given outdoor temperatures Tj			
Tj= + 35 °C	Pdc	28.0	kW	Tj = + 35 °C	EER_d or $GUE_{c,bin}$ / $AEF_{c,bin}$	2.6	%
Tj = + 30 °C		20.6	kW	Tj = + 30 °C		4.6	%
Tj = + 25 °C		13.2	kW	Tj = + 25 °C		9.3	%
Tj = + 20 °C		8.5	kW	Tj = + 20 °C		19.7	%
Degradation co- efficient for air conditioners**	C_{dc}	0.25	-				
Power consumption in modes other than 'active mode'							
Off mode	P_{OFF}	0.017	kW	Crankcase heater mode	P_{CK}	0.050	kW
Thermostat-off mode	P_{TO}	0.017	kW	Standby mode	P_{SB}	0.017	kW
Other items							
Capacity control		variable		For air-to-air air conditioner: air flow rate, outdoor		12440	m³/h
Sound power level, outdoor	L_{WA}	80.0	dB				
Sound power level, indoor	L_{WA}	- ****	dB	if engine driven: Emissions of nitrogen oxides	NO_x***	-	mg/kWh fuel input GCV
				GWP of the refrigerant		2088	kg CO_2 eq (100 years)
Contact details	Panasonic Testing Centre, Panasonic Marketing Europe GmbH Winsbergring 15, 22525 Hamburg, Germany						

** If C_{dc} is not determined by measurement then the default degradation coefficient air conditioners shall be 0,25.
*** from 26 September 2018.
Where information relates to multi-split air conditioners, the test result and performance data may be obtained on the basis of the performance of the outdoor unit, with a combination of indoor unit(s) recommended by the manufacturer or importer.
**** Refer to Information requirements for UnitList

Information requirements for heat pumps

Model(s):	Outdoor Unit	U-10MF3E8
	Indoor Unit	S-73MF2E5A x4
Outdoor side heat exchanger of heat pump:		air
Indoor side heat exchanger of heat pump:		air
Indication if the heater is equipped with a supplementary heater:		no
if applicable: driver of compressor: [electric motor or fuel driven, gaseous or liquid fuel, internal or external combustion engine]		electric motor

Parameters shall be declared for the average heating season, parameters for the warmer and colder heating seasons are optional.

Item	Symbol	Value	Unit	Item	Symbol	Value	Unit
Rated heating capacity	$P_{rated,h}$	31.5	kW	Seasonal space heating energy efficiency	$\eta_{s,h}$	166.8	%
Declared heating capacity for part load at indoor temperature 20 °C and outdoor temperature Tj				Declared coefficient of performance or gas utilization efficiency / auxiliary energy factor for part load at given outdoor temperatures Tj			
Tj = - 7 °C	P_{dh}	19.4	kW	Tj = - 7 °C	COP_d or $GUE_{h,bin}$ / $AEF_{h,bin}$	2.5	%
Tj = + 2 °C		11.8	kW	Tj = + 2 °C		3.7	%
Tj = + 7 °C		7.6	kW	Tj = + 7 °C		7.4	%
Tj = + 12 °C		6.9	kW	Tj = + 12 °C		9.4	%
T_{biv} = bivalent temperature		19.4	kW	T_{biv} = bivalent temperature		2.5	%
T_{OL} = operation limit		8.7	kW	T_{OL} = operation limit		1.5	%
For air-to-water heat pumps: Tj = - 15 °C (if T_{OL} < - 20 °C)		-	kW	For water-to-air heat pumps: T_j = - 15 °C (if T_{OL} < -20 °C)		-	%
Bivalent temperature	T_{biv}	-7	°C	For water-to-air heat pumps: Operation limit temperature	T_{OL}	-20	℃
Degradation co- efficient heat pumps**	C_{dh}	0.25	-				
Power consumption in modes other than 'active mode'				Supplementary heater			
Off mode	P_{OFF}	0.050	kW	back-up heating capacity *	elbu	5.1	kW
Thermostat-off mode	P_{TO}	0.050	kW	Type of energy input			
Crankcase heater mode	P_{CK}	0.050	kW	Standby mode	P_{SB}	0.050	kW
Other items							
Capacity control		variable		For air-to-air heat pumps: air flow rate,outdoor		12455	m³/h
Sound power level, outdoor	L_{WA}	82.0	dB	For water-/brine-to-air heat pumps: Rated brine or water flow rate, outdoor side heat exchanger		-	m³/h
Sound power level, indoor	L_{WA}	- ****	dB	Emissions of nitrogen oxides (if applicable)	NO_x***	-	mg/kWh fuel input GCV
				GWP of the refrigerant		2088	kg CO_2 eq (100 years)
Contact details	Panasonic Testing Centre, Panasonic Marketing Europe GmbH Winsbergring 15, 22525 Hamburg, Germany						

** If C_{dh} is not determined by measurement then the default degradation coefficient of heat pumps shall be 0,25.
*** from 26 September 2018.
Where information relates to multi-split heat pumps, the test result and performance data may be obtained on the basis of the performance of the outdoor unit, with a combination of indoor unit(s) recommended by the manufacturer or importer.
**** Refer to Information requirements for UnitList

Information requirements for air-to-air air conditioners

Model(s):	Outdoor Unit	U-10MF3E8
	Indoor Unit	S-73MD1E5 x4
Outdoor side heat exchanger of air conditioner:		air
Indoor side heat exchanger of air conditioner:		air
Type: compressor driven vapour compression or sorption process		vapour compression
if applicable: driver of compressor: [electric motor or fuel driven, gaseous or liquid fuel, internal or external combustion engine]		electric motor

Item	Symbol	Value	Unit	Item	Symbol	Value	Unit
Rated cooling capacity	$P_{rated,c}$	28.0	kW	Seasonal space cooling energy efficiency	$\eta_{s,c}$	235.6	%
Declared cooling capacity for part load at given outdoor temperatures Tj and indoor 27º/19ºC (dry/wet bulb)				Declared energy efficiency ratio or gas utilization efficiency / auxiliary energy factor for part load at given outdoor temperatures Tj			
Tj= + 35 ºC	Pdc	19.6	kW	Tj = + 35 ºC	EER_d or $GUE_{c,bin}$ / $AEF_{c,bin}$	2.6	%
Tj = + 30 ºC		14.4	kW	Tj = + 30 ºC		4.3	%
Tj = + 25 ºC		9.2	kW	Tj = + 25 ºC		8.0	%
Tj = + 20 ºC		7.2	kW	Tj = + 20 ºC		12.6	%
Degradation co- efficient for air conditioners**	C_{dc}	0.25	-				
Power consumption in modes other than 'active mode'							
Off mode	P_{OFF}	0.017	kW	Crankcase heater mode	P_{CK}	0.050	kW
Thermostat-off mode	P_{TO}	0.017	kW	Standby mode	P_{SB}	0.017	kW
Other items							
Capacity control		variable		For air-to-air air conditioner: air flow rate, outdoor		12440	m³/h
Sound power level, outdoor	L_{WA}	80.0	dB				
Sound power level, indoor	L_{WA}	- ****	dB	if engine driven: Emissions of nitrogen oxides	NO_x***	-	mg/kWh fuel input GCV
				GWP of the refrigerant		2088	kg CO_2 eq (100 years)
Contact details	Panasonic Testing Centre, Panasonic Marketing Europe GmbH Winsbergring 15, 22525 Hamburg, Germany						

** If C_{dc} is not determined by measurement then the default degradation coefficient air conditioners shall be 0,25.
*** from 26 September 2018.
Where information relates to multi-split air conditioners, the test result and performance data may be obtained on the basis of the performance of the outdoor unit, with a combination of indoor unit(s) recommended by the manufacturer or importer.
**** Refer to Information requirements for UnitList

Information requirements for heat pumps

Model(s):	Outdoor Unit	U-10MF3E8
	Indoor Unit	S-73MD1E5 x4
Outdoor side heat exchanger of heat pump:		air
Indoor side heat exchanger of heat pump:		air
Indication if the heater is equipped with a supplementary heater:		no
if applicable: driver of compressor: [electric motor or fuel driven, gaseous or liquid fuel, internal or external combustion engine]		electric motor

Parameters shall be declared for the average heating season, parameters for the warmer and colder heating seasons are optional.

Item	Symbol	Value	Unit	Item	Symbol	Value	Unit
Rated heating capacity	$P_{rated,h}$	31.5	kW	Seasonal space heating energy efficiency	$\eta_{s,h}$	139.0	%
Declared heating capacity for part load at indoor temperature 20 °C and outdoor temperature Tj				Declared coefficient of performance or gas utilization efficiency / auxiliary energy factor for part load at given outdoor temperatures Tj			
Tj = - 7 ºC	P_{dh}	16.7	kW	Tj = - 7 ºC	COP_d or $GUE_{h,bin}$ / $AEF_{h,bin}$	2.0	%
Tj = + 2 ºC		10.1	kW	Tj = + 2 ºC		3.1	%
Tj = + 7 ºC		6.5	kW	Tj = + 7 ºC		6.4	%
Tj = + 12 ºC		6.7	kW	Tj = + 12 ºC		7.9	%
T_{biv} = bivalent temperature		16.7	kW	T_{biv} = bivalent temperature		2.0	%
T_{OL} = operation limit		6.6	kW	T_{OL} = operation limit		1.3	%
For air-to-water heat pumps: Tj = - 15 ºC (if T_{OL} < - 20 ºC)		-	kW	For water-to-air heat pumps: T_j = - 15 ºC (if T_{OL} < -20 ºC)		-	%
Bivalent temperature	T_{biv}	-7	ºC	For water-to-air heat pumps: Operation limit temperature	T_{OL}	-20	℃
Degradation co- efficient heat pumps**	C_{dh}	0.25	-				
Power consumption in modes other than 'active mode'				Supplementary heater			
Off mode	P_{OFF}	0.050	kW	back-up heating capacity *	elbu	4.6	kW
Thermostat-off mode	P_{TO}	0.050	kW	Type of energy input			
Crankcase heater mode	P_{CK}	0.050	kW	Standby mode	P_{SB}	0.050	kW
Other items							
Capacity control		variable		For air-to-air heat pumps: air flow rate,outdoor		12455	m³/h
Sound power level, outdoor	L_{WA}	82.0	dB	For water-/brine-to-air heat pumps: Rated brine or water flow rate, outdoor side heat exchanger		-	m³/h
Sound power level, indoor	L_{WA}	- ****	dB	Emissions of nitrogen oxides (if applicable)	NO_x***	-	mg/kWh fuel input GCV
				GWP of the refrigerant		2088	kg CO_2 eq (100 years)
Contact details	Panasonic Testing Centre, Panasonic Marketing Europe GmbH Winsbergring 15, 22525 Hamburg, Germany						

** If C_{dh} is not determined by measurement then the default degradation coefficient of heat pumps shall be 0,25.
*** from 26 September 2018.
Where information relates to multi-split heat pumps, the test result and performance data may be obtained on the basis of the performance of the outdoor unit, with a combination of indoor unit(s) recommended by the manufacturer or importer.
**** Refer to Information requirements for UnitList

1. Outdoor Unit

Information requirements for air-to-air air conditioners

Model(s):	Outdoor Unit	U-12MF3E8
	Indoor Unit	S-56MF2E5A x6
Outdoor side heat exchanger of air conditioner:		air
Indoor side heat exchanger of air conditioner:		air
Type: compressor driven vapour compression or sorption process		vapour compression
if applicable: driver of compressor: [electric motor or fuel driven, gaseous or liquid fuel, internal or external combustion engine]		electric motor

Item	Symbol	Value	Unit	Item	Symbol	Value	Unit
Rated cooling capacity	$P_{rated,c}$	33.5	kW	Seasonal space cooling energy efficiency	$\eta_{s,c}$	252.7	%
Declared cooling capacity for part load at given outdoor temperatures Tj and indoor 27°/19°C (dry/wet bulb)				Declared energy efficiency ratio or gas utilization efficiency / auxiliary energy factor for part load at given outdoor temperatures Tj			
Tj= + 35 °C	Pdc	33.5	kW	Tj = + 35 °C	EER_d or $GUE_{c,bin}$ / $AEF_{c,bin}$	2.6	%
Tj = + 30 °C		24.6	kW	Tj = + 30 °C		4.3	%
Tj = + 25 °C		15.8	kW	Tj = + 25 °C		7.7	%
Tj = + 20 °C		7.1	kW	Tj = + 20 °C		15.7	%
Degradation co- efficient for air conditioners**	C_{dc}	0.25	-				
Power consumption in modes other than 'active mode'							
Off mode	P_{OFF}	0.017	kW	Crankcase heater mode	P_{CK}	0.050	kW
Thermostat-off mode	P_{TO}	0.017	kW	Standby mode	P_{SB}	0.017	kW
Other items							
Capacity control		variable		For air-to-air air conditioner: air flow rate, outdoor		13732	m³/h
Sound power level, outdoor	L_{WA}	84.0	dB				
Sound power level, indoor	L_{WA}	- ****	dB	if engine driven: Emissions of nitrogen oxides	NO_x***	-	mg/kWh fuel input GCV
				GWP of the refrigerant		2088	kg CO_2 eq (100 years)
Contact details	Panasonic Testing Centre, Panasonic Marketing Europe GmbH Winsbergring 15, 22525 Hamburg, Germany						

** If C_{dc} is not determined by measurement then the default degradation coefficient air conditioners shall be 0,25.
*** from 26 September 2018.
Where information relates to multi-split air conditioners, the test result and performance data may be obtained on the basis of the performance of the outdoor unit, with a combination of indoor unit(s) recommended by the manufacturer or importer.
**** Refer to Information requirements for UnitList

Information requirements for heat pumps

Model(s):	Outdoor Unit	U-12MF3E8
	Indoor Unit	S-56MF2E5A x6
Outdoor side heat exchanger of heat pump:		air
Indoor side heat exchanger of heat pump:		air
Indication if the heater is equipped with a supplementary heater:		no
if applicable: driver of compressor: [electric motor or fuel driven, gaseous or liquid fuel, internal or external combustion engine]		electric motor

Parameters shall be declared for the average heating season, parameters for the warmer and colder heating seasons are optional.

Item	Symbol	Value	Unit	Item	Symbol	Value	Unit
Rated heating capacity	$P_{rated,h}$	37.5	kW	Seasonal space heating energy efficiency	$\eta_{s,h}$	167.8	%
Declared heating capacity for part load at indoor temperature 20 °C and outdoor temperature Tj				Declared coefficient of performance or gas utilization efficiency / auxiliary energy factor for part load at given outdoor temperatures Tj			
Tj = - 7 °C	P_{dh}	23.1	kW	Tj = - 7 °C	COP_d or $GUE_{h,bin}$ / $AEF_{h,bin}$	2.7	%
Tj = + 2 °C		14.1	kW	Tj = + 2 °C		3.7	%
Tj = + 7 °C		9.0	kW	Tj = + 7 °C		6.9	%
Tj = + 12 °C		6.5	kW	Tj = + 12 °C		9.0	%
T_{biv} = bivalent temperature		25.1	kW	T_{biv} = bivalent temperature		2.3	%
T_{OL} = operation limit		8.8	kW	T_{OL} = operation limit		1.4	%
For air-to-water heat pumps: Tj = - 15 °C (if T_{OL} < - 20 °C)		-	kW	For water-to-air heat pumps: T_j = - 15 °C (if T_{OL} < -20 °C)		-	%
Bivalent temperature	T_{biv}	-9	°C	For water-to-air heat pumps: Operation limit temperature	T_{OL}	-20	℃
Degradation co- efficient heat pumps**	C_{dh}	0.25	-				
Power consumption in modes other than 'active mode'				Supplementary heater			
Off mode	P_{OFF}	0.050	kW	back-up heating capacity *	elbu	2.6	kW
Thermostat-off mode	P_{TO}	0.050	kW	Type of energy input			
Crankcase heater mode	P_{CK}	0.050	kW	Standby mode	P_{SB}	0.050	kW
Other items							
Capacity control		variable		For air-to-air heat pumps: air flow rate,outdoor		13467	m³/h
Sound power level, outdoor	L_{WA}	86.0	dB	For water-/brine-to-air heat pumps: Rated brine or water flow rate, outdoor side heat exchanger		-	m³/h
Sound power level, indoor	L_{WA}	- ****	dB	Emissions of nitrogen oxides (if applicable)	NO_x***	-	mg/kWh fuel input GCV
				GWP of the refrigerant		2088	kg CO_2 eq (100 years)
Contact details	Panasonic Testing Centre, Panasonic Marketing Europe GmbH Winsbergring 15, 22525 Hamburg, Germany						

** If C_{dh} is not determined by measurement then the default degradation coefficient of heat pumps shall be 0,25.
*** from 26 September 2018.
Where information relates to multi-split heat pumps, the test result and performance data may be obtained on the basis of the performance of the outdoor unit, with a combination of indoor unit(s) recommended by the manufacturer or importer.
**** Refer to Information requirements for UnitList

Information requirements for air-to-air air conditioners

Model(s):	Outdoor Unit	U-12MF3E8
	Indoor Unit	S-56MD1E5 x6
Outdoor side heat exchanger of air conditioner:		air
Indoor side heat exchanger of air conditioner:		air
Type: compressor driven vapour compression or sorption process		vapour compression
if applicable: driver of compressor: [electric motor or fuel driven, gaseous or liquid fuel, internal or external combustion engine]		electric motor

Item	Symbol	Value	Unit	Item	Symbol	Value	Unit
Rated cooling capacity	$P_{rated,c}$	33.5	kW	Seasonal space cooling energy efficiency	$\eta_{s,c}$	207.0	%
Declared cooling capacity for part load at given outdoor temperatures Tj and indoor 27º/19ºC (dry/wet bulb)				Declared energy efficiency ratio or gas utilization efficiency / auxiliary energy factor for part load at given outdoor temperatures Tj			
Tj= + 35 ºC	Pdc	23.4	kW	Tj = + 35 ºC	EER_d or $GUE_{c,bin}$ / $AEF_{c,bin}$	2.1	%
Tj = + 30 ºC		17.2	kW	Tj = + 30 ºC		3.8	%
Tj = + 25 ºC		11.0	kW	Tj = + 25 ºC		6.9	%
Tj = + 20 ºC		6.8	kW	Tj = + 20 ºC		10.6	%
Degradation co- efficient for air conditioners**	C_{dc}	0.25	-				
Power consumption in modes other than 'active mode'							
Off mode	P_{OFF}	0.017	kW	Crankcase heater mode	P_{CK}	0.050	kW
Thermostat-off mode	P_{TO}	0.017	kW	Standby mode	P_{SB}	0.017	kW
Other items							
Capacity control		variable		For air-to-air air conditioner: air flow rate, outdoor		13732	m³/h
Sound power level, outdoor	L_{WA}	84.0	dB				
Sound power level, indoor	L_{WA}	- ****	dB	if engine driven: Emissions of nitrogen oxides	NO_x***	-	mg/kWh fuel input GCV
				GWP of the refrigerant		2088	kg CO_2 eq (100 years)
Contact details	Panasonic Testing Centre, Panasonic Marketing Europe GmbH Winsbergring 15, 22525 Hamburg, Germany						

** If C_{dc} is not determined by measurement then the default degradation coefficient air conditioners shall be 0,25.
*** from 26 September 2018.
Where information relates to multi-split air conditioners, the test result and performance data may be obtained on the basis of the performance of the outdoor unit, with a combination of indoor unit(s) recommended by the manufacturer or importer.
**** Refer to Information requirements for UnitList

Information requirements for heat pumps

Model(s):	Outdoor Unit	U-12MF3E8
	Indoor Unit	S-56MD1E5 x6
Outdoor side heat exchanger of heat pump:		air
Indoor side heat exchanger of heat pump:		air
Indication if the heater is equipped with a supplementary heater:		no
if applicable: driver of compressor: [electric motor or fuel driven, gaseous or liquid fuel, internal or external combustion engine]		electric motor

Parameters shall be declared for the average heating season, parameters for the warmer and colder heating seasons are optional.

Item	Symbol	Value	Unit	Item	Symbol	Value	Unit
Rated heating capacity	$P_{rated,h}$	37.5	kW	Seasonal space heating energy efficiency	$\eta_{s,h}$	139.1	%
Declared heating capacity for part load at indoor temperature 20 °C and outdoor temperature Tj				Declared coefficient of performance or gas utilization efficiency / auxiliary energy factor for part load at given outdoor temperatures Tj			
Tj = - 7 ºC	P_{dh}	18.2	kW	Tj = - 7 ºC	COP_d or $GUE_{h,bin}$ / $AEF_{h,bin}$	2.4	%
Tj = + 2 ºC		11.0	kW	Tj = + 2 ºC		3.0	%
Tj = + 7 ºC		7.1	kW	Tj = + 7 ºC		5.8	%
Tj = + 12 ºC		6.2	kW	Tj = + 12 ºC		7.8	%
T_{biv} = bivalent temperature		18.2	kW	T_{biv} = bivalent temperature		2.4	%
T_{OL} = operation limit		6.7	kW	T_{OL} = operation limit		1.1	%
For air-to-water heat pumps: Tj = - 15 ºC (if T_{OL} < - 20 ºC)		-	kW	For water-to-air heat pumps: T_j = - 15 ºC (if T_{OL} < -20 ºC)		-	%
Bivalent temperature	T_{biv}	-7	ºC	For water-to-air heat pumps: Operation limit temperature	T_{OL}	-20	℃
Degradation co- efficient heat pumps**	C_{dh}	0.25	-				
Power consumption in modes other than 'active mode'				Supplementary heater			
Off mode	P_{OFF}	0.050	kW	back-up heating capacity *	elbu	5.1	kW
Thermostat-off mode	P_{TO}	0.050	kW	Type of energy input			
Crankcase heater mode	P_{CK}	0.050	kW	Standby mode	P_{SB}	0.050	kW
Other items							
Capacity control		variable		For air-to-air heat pumps: air flow rate,outdoor		13467	m³/h
Sound power level, outdoor	L_{WA}	86.0	dB	For water-/brine-to-air heat pumps: Rated brine or water flow rate, outdoor side heat exchanger		-	m³/h
Sound power level, indoor	L_{WA}	- ****	dB	Emissions of nitrogen oxides (if applicable)	NO_x***	-	mg/kWh fuel input GCV
				GWP of the refrigerant		2088	kg CO_2 eq (100 years)
Contact details	Panasonic Testing Centre, Panasonic Marketing Europe GmbH Winsbergring 15, 22525 Hamburg, Germany						

** If C_{dh} is not determined by measurement then the default degradation coefficient of heat pumps shall be 0,25.
*** from 26 September 2018.
Where information relates to multi-split heat pumps, the test result and performance data may be obtained on the basis of the performance of the outdoor unit, with a combination of indoor unit(s) recommended by the manufacturer or importer.
**** Refer to Information requirements for UnitList

1. Outdoor Unit

Information requirements for air-to-air air conditioners

Model(s):	Outdoor Unit	U-14MF3E8
	Indoor Unit	S-60MF2E5A x2 , S-73MF2E5A x4
Outdoor side heat exchanger of air conditioner:		air
Indoor side heat exchanger of air conditioner:		air
Type: compressor driven vapour compression or sorption process		vapour compression
if applicable: driver of compressor: [electric motor or fuel driven, gaseous or liquid fuel, internal or external combustion engine]		electric motor

Item	Symbol	Value	Unit	Item	Symbol	Value	Unit
Rated cooling capacity	$P_{rated,c}$	40.0	kW	Seasonal space cooling energy efficiency	$\eta_{s,c}$	264.4	%
Declared cooling capacity for part load at given outdoor temperatures Tj and indoor 27º/19ºC (dry/wet bulb)				Declared energy efficiency ratio or gas utilization efficiency / auxiliary energy factor for part load at given outdoor temperatures Tj			
Tj= + 35 ºC	Pdc	40.0	kW	Tj = + 35 ºC	EER_d or $GUE_{c,bin}$ / $AEF_{c,bin}$	2.6	%
Tj = + 30 ºC		29.4	kW	Tj = + 30 ºC		4.4	%
Tj = + 25 ºC		18.9	kW	Tj = + 25 ºC		8.3	%
Tj = + 20 ºC		8.5	kW	Tj = + 20 ºC		19.7	%
Degradation co- efficient for air conditioners**	C_{dc}	0.25	-				
Power consumption in modes other than 'active mode'							
Off mode	P_{OFF}	0.025	kW	Crankcase heater mode	P_{CK}	0.091	kW
Thermostat-off mode	P_{TO}	0.025	kW	Standby mode	P_{SB}	0.025	kW
Other items							
Capacity control		variable		For air-to-air air conditioner: air flow rate, outdoor		13686	m³/h
Sound power level, outdoor	L_{WA}	86.0	dB				
Sound power level, indoor	L_{WA}	- ****	dB	if engine driven: Emissions of nitrogen oxides	NO_x***	-	mg/kWh fuel input GCV
				GWP of the refrigerant		2088	kg CO_2 eq (100 years)
Contact details	Panasonic Testing Centre, Panasonic Marketing Europe GmbH Winsbergring 15, 22525 Hamburg, Germany						

** If C_{dc} is not determined by measurement then the default degradation coefficient air conditioners shall be 0,25.
*** from 26 September 2018.
Where information relates to multi-split air conditioners, the test result and performance data may be obtained on the basis of the performance of the outdoor unit, with a combination of indoor unit(s) recommended by the manufacturer or importer.
**** Refer to Information requirements for UnitList

Information requirements for heat pumps

Model(s):	Outdoor Unit	U-14MF3E8
	Indoor Unit	S-60MF2E5A x2 , S-73MF2E5A x4
Outdoor side heat exchanger of heat pump:		air
Indoor side heat exchanger of heat pump:		air
Indication if the heater is equipped with a supplementary heater:		no
if applicable: driver of compressor: [electric motor or fuel driven, gaseous or liquid fuel, internal or external combustion engine]		electric motor

Parameters shall be declared for the average heating season, parameters for the warmer and colder heating seasons are optional.

Item	Symbol	Value	Unit	Item	Symbol	Value	Unit
Rated heating capacity	$P_{rated,h}$	45.0	kW	Seasonal space heating energy efficiency	$\eta_{s,h}$	162.1	%
Declared heating capacity for part load at indoor temperature 20 °C and outdoor temperature Tj				Declared coefficient of performance or gas utilization efficiency / auxiliary energy factor for part load at given outdoor temperatures Tj			
Tj = - 7 ºC	P_{dh}	27.8	kW	Tj = - 7 ºC	COP_d or $GUE_{h,bin}$ / $AEF_{h,bin}$	2.4	%
Tj = + 2 ºC		16.9	kW	Tj = + 2 ºC		3.6	%
Tj = + 7 ºC		10.9	kW	Tj = + 7 ºC		7.1	%
Tj = + 12 ºC		6.6	kW	Tj = + 12 ºC		9.6	%
T_{biv} = bivalent temperature		27.8	kW	T_{biv} = bivalent temperature		2.4	%
T_{OL} = operation limit		9.4	kW	T_{OL} = operation limit		1.2	%
For air-to-water heat pumps: Tj = - 15 ºC (if T_{OL} < - 20 ºC)		-	kW	For water-to-air heat pumps: T_j = - 15 ºC (if T_{OL} < -20 ºC)		-	%
Bivalent temperature	T_{biv}	-7	ºC	For water-to-air heat pumps: Operation limit temperature	T_{OL}	-20	℃
Degradation co- efficient heat pumps**	C_{dh}	0.25	-				
Power consumption in modes other than 'active mode'				Supplementary heater			
Off mode	P_{OFF}	0.091	kW	back-up heating capacity *	elbu	8.0	kW
Thermostat-off mode	P_{TO}	0.091	kW	Type of energy input			
Crankcase heater mode	P_{CK}	0.091	kW	Standby mode	P_{SB}	0.091	kW
Other items							
Capacity control		variable		For air-to-air heat pumps: air flow rate,outdoor		14141	m³/h
Sound power level, outdoor	L_{WA}	86.0	dB	For water-/brine-to-air heat pumps: Rated brine or water flow rate, outdoor side heat exchanger		-	m³/h
Sound power level, indoor	L_{WA}	- ****	dB	Emissions of nitrogen oxides (if applicable)	NO_x***	-	mg/kWh fuel input GCV
				GWP of the refrigerant		2088	kg CO_2 eq (100 years)
Contact details	Panasonic Testing Centre, Panasonic Marketing Europe GmbH Winsbergring 15, 22525 Hamburg, Germany						

** If C_{dh} is not determined by measurement then the default degradation coefficient of heat pumps shall be 0,25.
*** from 26 September 2018.
Where information relates to multi-split heat pumps, the test result and performance data may be obtained on the basis of the performance of the outdoor unit, with a combination of indoor unit(s) recommended by the manufacturer or importer.
**** Refer to Information requirements for UnitList

Information requirements for air-to-air air conditioners

Model(s):	Outdoor Unit	U-14MF3E8
	Indoor Unit	S-56MD1E5 x2 , S-73MD1E5 x4
Outdoor side heat exchanger of air conditioner:		air
Indoor side heat exchanger of air conditioner:		air
Type: compressor driven vapour compression or sorption process		vapour compression
if applicable: driver of compressor: [electric motor or fuel driven, gaseous or liquid fuel, internal or external combustion engine]		electric motor

Item	Symbol	Value	Unit	Item	Symbol	Value	Unit
Rated cooling capacity	$P_{rated,c}$	40.0	kW	Seasonal space cooling energy efficiency	$\eta_{s,c}$	223.9	%
Declared cooling capacity for part load at given outdoor temperatures Tj and indoor 27º/19ºC (dry/wet bulb)				Declared energy efficiency ratio or gas utilization efficiency / auxiliary energy factor for part load at given outdoor temperatures Tj			
Tj= + 35 ºC	Pdc	32.0	kW	Tj = + 35 ºC	EER_d or $GUE_{c,bin}$ / $AEF_{c,bin}$	2.2	%
Tj = + 30 ºC		23.5	kW	Tj = + 30 ºC		4.1	%
Tj = + 25 ºC		15.1	kW	Tj = + 25 ºC		7.1	%
Tj = + 20 ºC		9.0	kW	Tj = + 20 ºC		14.7	%
Degradation co- efficient for air conditioners**	C_{dc}	0.25	-				
Power consumption in modes other than 'active mode'							
Off mode	P_{OFF}	0.025	kW	Crankcase heater mode	P_{CK}	0.091	kW
Thermostat-off mode	P_{TO}	0.025	kW	Standby mode	P_{SB}	0.025	kW
Other items							
Capacity control		variable		For air-to-air air conditioner: air flow rate, outdoor		13686	m³/h
Sound power level, outdoor	L_{WA}	86.0	dB				
Sound power level, indoor	L_{WA}	- ****	dB	if engine driven: Emissions of nitrogen oxides	NO_x***	-	mg/kWh fuel input GCV
				GWP of the refrigerant		2088	kg CO_2 eq (100 years)
Contact details	Panasonic Testing Centre, Panasonic Marketing Europe GmbH Winsbergring 15, 22525 Hamburg, Germany						

** If C_{dc} is not determined by measurement then the default degradation coefficient air conditioners shall be 0,25.
*** from 26 September 2018.
Where information relates to multi-split air conditioners, the test result and performance data may be obtained on the basis of the performance of the outdoor unit, with a combination of indoor unit(s) recommended by the manufacturer or importer.
**** Refer to Information requirements for UnitList

Information requirements for heat pumps

Model(s):	Outdoor Unit	U-14MF3E8
	Indoor Unit	S-56MD1E5 x2 , S-73MD1E5 x4
Outdoor side heat exchanger of heat pump:		air
Indoor side heat exchanger of heat pump:		air
Indication if the heater is equipped with a supplementary heater:		no
if applicable: driver of compressor: [electric motor or fuel driven, gaseous or liquid fuel, internal or external combustion engine]		electric motor

Parameters shall be declared for the average heating season, parameters for the warmer and colder heating seasons are optional.

Item	Symbol	Value	Unit	Item	Symbol	Value	Unit
Rated heating capacity	$P_{rated,h}$	45.0	kW	Seasonal space heating energy efficiency	$\eta_{s,h}$	143.8	%
Declared heating capacity for part load at indoor temperature 20 °C and outdoor temperature Tj				Declared coefficient of performance or gas utilization efficiency / auxiliary energy factor for part load at given outdoor temperatures Tj			
Tj = - 7 ºC	P_{dh}	25.8	kW	Tj = - 7 ºC	COP_d or $GUE_{h,bin}$ / $AEF_{h,bin}$	2.1	%
Tj = + 2 ºC		15.7	kW	Tj = + 2 ºC		3.1	%
Tj = + 7 ºC		10.1	kW	Tj = + 7 ºC		6.7	%
Tj = + 12 ºC		6.2	kW	Tj = + 12 ºC		10.0	%
T_{biv} = bivalent temperature		25.8	kW	T_{biv} = bivalent temperature		2.1	%
T_{OL} = operation limit		7.1	kW	T_{OL} = operation limit		1.0	%
For air-to-water heat pumps: Tj = - 15 ºC (if T_{OL} < - 20 ºC)		-	kW	For water-to-air heat pumps: T_j = - 15 ºC (if T_{OL} < -20 ºC)		-	%
Bivalent temperature	T_{biv}	-7	ºC	For water-to-air heat pumps: Operation limit temperature	T_{OL}	-20	℃
Degradation co- efficient heat pumps**	C_{dh}	0.25	-				
Power consumption in modes other than 'active mode'				Supplementary heater			
Off mode	P_{OFF}	0.091	kW	back-up heating capacity *	elbu	7.8	kW
Thermostat-off mode	P_{TO}	0.091	kW	Type of energy input			
Crankcase heater mode	P_{CK}	0.091	kW	Standby mode	P_{SB}	0.091	kW
Other items							
Capacity control		variable		For air-to-air heat pumps: air flow rate,outdoor		14141	m³/h
Sound power level, outdoor	L_{WA}	86.0	dB	For water-/brine-to-air heat pumps: Rated brine or water flow rate, outdoor side heat exchanger		-	m³/h
Sound power level, indoor	L_{WA}	- ****	dB	Emissions of nitrogen oxides (if applicable)	NO_x***	-	mg/kWh fuel input GCV
				GWP of the refrigerant		2088	kg CO_2 eq (100 years)
Contact details	Panasonic Testing Centre, Panasonic Marketing Europe GmbH Winsbergring 15, 22525 Hamburg, Germany						

** If C_{dh} is not determined by measurement then the default degradation coefficient of heat pumps shall be 0,25.
*** from 26 September 2018.
Where information relates to multi-split heat pumps, the test result and performance data may be obtained on the basis of the performance of the outdoor unit, with a combination of indoor unit(s) recommended by the manufacturer or importer.
**** Refer to Information requirements for UnitList

1. Outdoor Unit

Information requirements for air-to-air air conditioners

Model(s):	Outdoor Unit	U-16MF3E8
	Indoor Unit	S-73MF2E5A x6
Outdoor side heat exchanger of air conditioner:		air
Indoor side heat exchanger of air conditioner:		air
Type: compressor driven vapour compression or sorption process		vapour compression
if applicable: driver of compressor: [electric motor or fuel driven, gaseous or liquid fuel, internal or external combustion engine]		electric motor

Item	Symbol	Value	Unit	Item	Symbol	Value	Unit
Rated cooling capacity	$P_{rated,c}$	45.0	kW	Seasonal space cooling energy efficiency	$\eta_{s,c}$	237.7	%
Declared cooling capacity for part load at given outdoor temperatures Tj and indoor 27°/19°C (dry/wet bulb)				Declared energy efficiency ratio or gas utilization efficiency / auxiliary energy factor for part load at given outdoor temperatures Tj			
Tj= + 35 °C	Pdc	45.0	kW	Tj = + 35 °C	EER_d or $GUE_{c,bin}$ / $AEF_{c,bin}$	2.3	%
Tj = + 30 °C		33.1	kW	Tj = + 30 °C		3.9	%
Tj = + 25 °C		21.3	kW	Tj = + 25 °C		7.4	%
Tj = + 20 °C		9.4	kW	Tj = + 20 °C		17.4	%
Degradation co- efficient for air conditioners**	C_{dc}	0.25	-				
Power consumption in modes other than 'active mode'							
Off mode	P_{OFF}	0.025	kW	Crankcase heater mode	P_{CK}	0.091	kW
Thermostat-off mode	P_{TO}	0.025	kW	Standby mode	P_{SB}	0.025	kW
Other items							
Capacity control		variable		For air-to-air air conditioner: air flow rate, outdoor		13766	m³/h
Sound power level, outdoor	L_{WA}	86.0	dB				
Sound power level, indoor	L_{WA}	- ****	dB	if engine driven: Emissions of nitrogen oxides	NO_x***	-	mg/kWh fuel input GCV
				GWP of the refrigerant		2088	kg CO_2 eq (100 years)
Contact details	Panasonic Testing Centre, Panasonic Marketing Europe GmbH Winsbergring 15, 22525 Hamburg, Germany						

** If C_{dc} is not determined by measurement then the default degradation coefficient air conditioners shall be 0,25.
*** from 26 September 2018.
Where information relates to multi-split air conditioners, the test result and performance data may be obtained on the basis of the performance of the outdoor unit, with a combination of indoor unit(s) recommended by the manufacturer or importer.
**** Refer to Information requirements for UnitList

Information requirements for heat pumps

Model(s):	Outdoor Unit	U-16MF3E8
	Indoor Unit	S-73MF2E5A x6
Outdoor side heat exchanger of heat pump:		air
Indoor side heat exchanger of heat pump:		air
Indication if the heater is equipped with a supplementary heater:		no
if applicable: driver of compressor: [electric motor or fuel driven, gaseous or liquid fuel, internal or external combustion engine]		electric motor

Parameters shall be declared for the average heating season, parameters for the warmer and colder heating seasons are optional.

Item	Symbol	Value	Unit	Item	Symbol	Value	Unit
Rated heating capacity	$P_{rated,h}$	50.0	kW	Seasonal space heating energy efficiency	$\eta_{s,h}$	149.3	%
Declared heating capacity for part load at indoor temperature 20 °C and outdoor temperature Tj				Declared coefficient of performance or gas utilization efficiency / auxiliary energy factor for part load at given outdoor temperatures Tj			
Tj = - 7 °C	P_{dh}	30.9	kW	Tj = - 7 °C	COP_d or $GUE_{h,bin}$ / $AEF_{h,bin}$	2.2	%
Tj = + 2 °C		18.8	kW	Tj = + 2 °C		3.3	%
Tj = + 7 °C		12.1	kW	Tj = + 7 °C		6.5	%
Tj = + 12 °C		6.6	kW	Tj = + 12 °C		9.6	%
T_{biv} = bivalent temperature		30.9	kW	T_{biv} = bivalent temperature		2.2	%
T_{OL} = operation limit		9.4	kW	T_{OL} = operation limit		1.2	%
For air-to-water heat pumps: Tj = - 15 °C (if T_{OL} < - 20 °C)		-	kW	For water-to-air heat pumps: T_j = - 15 °C (if T_{OL} < -20 °C)		-	%
Bivalent temperature	T_{biv}	-7	°C	For water-to-air heat pumps: Operation limit temperature	T_{OL}	-20	℃
Degradation co- efficient heat pumps**	C_{dh}	0.25	-				
Power consumption in modes other than 'active mode'				Supplementary heater			
Off mode	P_{OFF}	0.091	kW	back-up heating capacity *	elbu	9.1	kW
Thermostat-off mode	P_{TO}	0.091	kW	Type of energy input			
Crankcase heater mode	P_{CK}	0.091	kW	Standby mode	P_{SB}	0.091	kW
Other items							
Capacity control		variable		For air-to-air heat pumps: air flow rate,outdoor		14141	m³/h
Sound power level, outdoor	L_{WA}	88.0	dB	For water-/brine-to-air heat pumps: Rated brine or water flow rate, outdoor side heat exchanger		-	m³/h
Sound power level, indoor	L_{WA}	- ****	dB	Emissions of nitrogen oxides (if applicable)	NO_x***	-	mg/kWh fuel input GCV
				GWP of the refrigerant		2088	kg CO_2 eq (100 years)
Contact details	Panasonic Testing Centre, Panasonic Marketing Europe GmbH Winsbergring 15, 22525 Hamburg, Germany						

** If C_{dh} is not determined by measurement then the default degradation coefficient of heat pumps shall be 0,25.
*** from 26 September 2018.
Where information relates to multi-split heat pumps, the test result and performance data may be obtained on the basis of the performance of the outdoor unit, with a combination of indoor unit(s) recommended by the manufacturer or importer.
**** Refer to Information requirements for UnitList

Information requirements for air-to-air air conditioners

Model(s):	Outdoor Unit	U-16MF3E8
	Indoor Unit	S-73MD1E5 x6
Outdoor side heat exchanger of air conditioner:		air
Indoor side heat exchanger of air conditioner:		air
Type: compressor driven vapour compression or sorption process		vapour compression
if applicable: driver of compressor: [electric motor or fuel driven, gaseous or liquid fuel, internal or external combustion engine]		electric motor

Item	Symbol	Value	Unit	Item	Symbol	Value	Unit
Rated cooling capacity	$P_{rated,c}$	45.0	kW	Seasonal space cooling energy efficiency	$\eta_{s,c}$	199.0	%
Declared cooling capacity for part load at given outdoor temperatures Tj and indoor 27º/19ºC (dry/wet bulb)				Declared energy efficiency ratio or gas utilization efficiency / auxiliary energy factor for part load at given outdoor temperatures Tj			
Tj= + 35 ºC	Pdc	36.0	kW	Tj = + 35 ºC	EER_d or $GUE_{c,bin}$ / $AEF_{c,bin}$	1.8	%
Tj = + 30 ºC		26.5	kW	Tj = + 30 ºC		3.6	%
Tj = + 25 ºC		17.0	kW	Tj = + 25 ºC		6.4	%
Tj = + 20 ºC		9.9	kW	Tj = + 20 ºC		12.9	%
Degradation co- efficient for air conditioners**	C_{dc}	0.25	-				
Power consumption in modes other than 'active mode'							
Off mode	P_{OFF}	0.025	kW	Crankcase heater mode	P_{CK}	0.091	kW
Thermostat-off mode	P_{TO}	0.025	kW	Standby mode	P_{SB}	0.025	kW
Other items							
Capacity control		variable		For air-to-air air conditioner: air flow rate, outdoor		13766	m³/h
Sound power level, outdoor	L_{WA}	86.0	dB				
Sound power level, indoor	L_{WA}	- ****	dB	if engine driven: Emissions of nitrogen oxides	NO_x***	-	mg/kWh fuel input GCV
				GWP of the refrigerant		2088	kg CO_2 eq (100 years)
Contact details	Panasonic Testing Centre, Panasonic Marketing Europe GmbH Winsbergring 15, 22525 Hamburg, Germany						

** If C_{dc} is not determined by measurement then the default degradation coefficient air conditioners shall be 0,25.
*** from 26 September 2018.
Where information relates to multi-split air conditioners, the test result and performance data may be obtained on the basis of the performance of the outdoor unit, with a combination of indoor unit(s) recommended by the manufacturer or importer.
**** Refer to Information requirements for UnitList

Information requirements for heat pumps

Model(s):	Outdoor Unit	U-16MF3E8
	Indoor Unit	S-73MD1E5 x6
Outdoor side heat exchanger of heat pump:		air
Indoor side heat exchanger of heat pump:		air
Indication if the heater is equipped with a supplementary heater:		no
if applicable: driver of compressor: [electric motor or fuel driven, gaseous or liquid fuel, internal or external combustion engine]		electric motor

Parameters shall be declared for the average heating season, parameters for the warmer and colder heating seasons are optional.

Item	Symbol	Value	Unit	Item	Symbol	Value	Unit
Rated heating capacity	$P_{rated,h}$	50.0	kW	Seasonal space heating energy efficiency	$\eta_{s,h}$	139.0	%
Declared heating capacity for part load at indoor temperature 20 °C and outdoor temperature Tj				Declared coefficient of performance or gas utilization efficiency / auxiliary energy factor for part load at given outdoor temperatures Tj			
Tj = - 7 ºC	P_{dh}	26.5	kW	Tj = - 7 ºC	COP_d or $GUE_{h,bin}$ / $AEF_{h,bin}$	2.0	%
Tj = + 2 ºC		16.1	kW	Tj = + 2 ºC		3.0	%
Tj = + 7 ºC		10.3	kW	Tj = + 7 ºC		6.5	%
Tj = + 12 ºC		6.2	kW	Tj = + 12 ºC		10.0	%
T_{biv} = bivalent temperature		26.5	kW	T_{biv} = bivalent temperature		2.0	%
T_{OL} = operation limit		7.1	kW	T_{OL} = operation limit		1.0	%
For air-to-water heat pumps: Tj = - 15 ºC (if T_{OL} < - 20 ºC)		-	kW	For water-to-air heat pumps: T_j = - 15 ºC (if T_{OL} < -20 ºC)		-	%
Bivalent temperature	T_{biv}	-7	ºC	For water-to-air heat pumps: Operation limit temperature	T_{OL}	-20	℃
Degradation co- efficient heat pumps**	C_{dh}	0.25	-				
Power consumption in modes other than 'active mode'				Supplementary heater			
Off mode	P_{OFF}	0.091	kW	back-up heating capacity *	elbu	8.0	kW
Thermostat-off mode	P_{TO}	0.091	kW	Type of energy input			
Crankcase heater mode	P_{CK}	0.091	kW	Standby mode	P_{SB}	0.091	kW
Other items							
Capacity control		variable		For air-to-air heat pumps: air flow rate,outdoor		14141	m³/h
Sound power level, outdoor	L_{WA}	88.0	dB	For water-/brine-to-air heat pumps: Rated brine or water flow rate, outdoor side heat exchanger		-	m³/h
Sound power level, indoor	L_{WA}	- ****	dB	Emissions of nitrogen oxides (if applicable)	NO_x***	-	mg/kWh fuel input GCV
				GWP of the refrigerant		2088	kg CO_2 eq (100 years)
Contact details	Panasonic Testing Centre, Panasonic Marketing Europe GmbH Winsbergring 15, 22525 Hamburg, Germany						

** If C_{dh} is not determined by measurement then the default degradation coefficient of heat pumps shall be 0,25.
*** from 26 September 2018.
Where information relates to multi-split heat pumps, the test result and performance data may be obtained on the basis of the performance of the outdoor unit, with a combination of indoor unit(s) recommended by the manufacturer or importer.
**** Refer to Information requirements for UnitList

1. Capacity of Outdoor Unit

1-1. U-8MF3E8 (Cooling)

Capacity Ratio 30-130%

TC: Total capacity (kW), PI: Power input (kW)

Combination :Indoor/outdoor capacity ratio	Outdoor air temp. °CDB	Indoor air temp. : °CWB													
		14.0		16.0		18.0		19.0		21.0		23.0		25.0	
		TC	PI	TC	PI	TC	PI	TC	PI	TC	PI	TC	PI	TC	PI
		kW	kW	kW	kW	kW	kW	kW	kW	kW	kW	kW	kW	kW	kW
130%	-10.0	19.4	2.02	23.3	2.43	24.1	2.51	24.1	2.51	27.3	2.85	30.5	3.18	33.7	3.51
	-5.0	19.4	2.02	23.3	2.43	24.1	2.51	24.1	2.51	27.3	2.85	30.5	3.18	33.7	3.52
	0.0	19.4	2.03	23.3	2.43	24.1	2.52	24.1	2.52	27.3	2.85	30.5	3.19	33.7	3.52
	5.0	19.4	2.03	23.3	2.44	24.1	2.52	24.1	2.52	27.3	2.86	30.5	3.19	33.7	3.53
	10.0	19.4	2.04	23.3	2.44	24.1	2.53	24.1	2.53	27.3	2.87	30.5	3.20	33.7	3.54
	15.0	19.4	2.04	23.3	2.45	24.1	2.55	24.1	2.55	27.3	2.90	30.5	3.25	33.7	3.59
	20.0	19.4	2.07	23.3	2.50	24.1	2.65	24.1	2.65	27.3	3.04	30.5	3.43	33.7	3.98
	25.0	19.4	2.30	23.3	2.86	24.1	3.19	24.1	3.19	27.3	3.77	30.5	4.39	33.7	5.06
	30.0	19.4	2.91	23.3	3.60	24.1	3.98	24.1	3.98	27.3	4.67	30.5	5.42	33.5	6.13
	35.0	19.4	3.56	23.3	4.39	24.1	4.82	24.1	4.82	27.3	5.65	29.6	6.13	30.9	6.13
	40.0	19.4	4.25	23.3	5.25	24.1	5.73	24.1	5.73	26.1	6.13	27.2	6.13	28.5	6.13
	43.0	19.4	4.70	23.3	5.79	23.7	6.13	23.7	6.13	24.8	6.13	25.9	6.13	27.1	6.13
	46.0	19.2	5.11	20.5	5.23	20.5	5.23	20.5	5.23	21.1	4.99	21.8	4.80	22.6	4.65
	52.0	8.4	1.90	8.7	1.90	8.7	1.90	8.7	1.90	9.6	1.95	10.5	2.00	11.6	2.06

Combination :Indoor/outdoor capacity ratio	Outdoor air temp. °CDB	Indoor air temp. : °CWB													
		14.0		16.0		18.0		19.0		21.0		23.0		25.0	
		TC	PI	TC	PI	TC	PI	TC	PI	TC	PI	TC	PI	TC	PI
		kW	kW	kW	kW	kW	kW	kW	kW	kW	kW	kW	kW	kW	kW
120%	-10.0	17.9	1.87	21.5	2.24	23.5	2.45	23.5	2.45	26.7	2.78	29.8	3.11	32.9	3.43
	-5.0	17.9	1.87	21.5	2.24	23.5	2.46	23.5	2.46	26.7	2.78	29.8	3.11	32.9	3.44
	0.0	17.9	1.87	21.5	2.25	23.5	2.46	23.5	2.46	26.7	2.79	29.8	3.12	32.9	3.44
	5.0	17.9	1.88	21.5	2.25	23.5	2.46	23.5	2.46	26.7	2.79	29.8	3.12	32.9	3.45
	10.0	17.9	1.88	21.5	2.26	23.5	2.47	23.5	2.47	26.7	2.80	29.8	3.13	32.9	3.46
	15.0	17.9	1.89	21.5	2.26	23.5	2.49	23.5	2.49	26.7	2.83	29.8	3.18	32.9	3.51
	20.0	17.9	1.91	21.5	2.31	23.5	2.58	23.5	2.58	26.7	2.96	29.8	3.33	32.9	3.83
	25.0	17.9	2.13	21.5	2.64	23.5	3.09	23.5	3.09	26.7	3.64	29.8	4.24	32.9	4.88
	30.0	17.9	2.69	21.5	3.32	23.5	3.85	23.5	3.85	26.7	4.52	29.8	5.24	32.9	6.00
	35.0	17.9	3.28	21.5	4.05	23.5	4.67	23.5	4.67	26.7	5.47	29.4	6.13	30.6	6.13
	40.0	17.9	3.93	21.5	4.83	23.5	5.56	23.5	5.56	25.9	6.13	27.0	6.13	28.2	6.13
	43.0	17.9	4.33	21.5	5.33	23.3	6.05	23.3	6.05	24.6	6.13	25.7	6.13	26.9	6.13
	46.0	17.7	4.72	20.4	5.26	20.4	5.26	20.4	5.26	20.9	5.00	21.6	4.80	22.4	4.64
	52.0	7.8	1.87	8.5	1.87	8.5	1.87	8.5	1.87	9.4	1.91	10.3	1.96	11.3	2.02

Combination :Indoor/outdoor capacity ratio	Outdoor air temp. °CDB	Indoor air temp. : °CWB													
		14.0		16.0		18.0		19.0		21.0		23.0		25.0	
		TC	PI	TC	PI	TC	PI	TC	PI	TC	PI	TC	PI	TC	PI
		kW	kW	kW	kW	kW	kW	kW	kW	kW	kW	kW	kW	kW	kW
110%	-10.0	16.4	1.71	19.7	2.06	23.0	2.39	23.0	2.39	26.0	2.71	29.1	3.03	32.1	3.35
	-5.0	16.4	1.71	19.7	2.06	23.0	2.40	23.0	2.40	26.0	2.72	29.1	3.04	32.1	3.36
	0.0	16.4	1.72	19.7	2.06	23.0	2.40	23.0	2.40	26.0	2.72	29.1	3.04	32.1	3.36
	5.0	16.4	1.72	19.7	2.06	23.0	2.41	23.0	2.41	26.0	2.73	29.1	3.05	32.1	3.36
	10.0	16.4	1.73	19.7	2.07	23.0	2.41	23.0	2.41	26.0	2.73	29.1	3.06	32.1	3.38
	15.0	16.4	1.73	19.7	2.08	23.0	2.43	23.0	2.43	26.0	2.76	29.1	3.10	32.1	3.43
	20.0	16.4	1.75	19.7	2.12	23.0	2.52	23.0	2.52	26.0	2.88	29.1	3.25	32.1	3.69
	25.0	16.4	1.97	19.7	2.42	23.0	2.99	23.0	2.99	26.0	3.52	29.1	4.09	32.1	4.70
	30.0	16.4	2.47	19.7	3.04	23.0	3.73	23.0	3.73	26.0	4.37	29.1	5.06	32.1	5.79
	35.0	16.4	3.01	19.7	3.71	23.0	4.52	23.0	4.52	26.0	5.29	29.1	6.10	30.4	6.13
	40.0	16.4	3.60	19.7	4.42	23.0	5.39	23.0	5.39	25.7	6.13	26.8	6.13	28.0	6.13
	43.0	16.4	3.97	19.7	4.88	23.0	5.94	23.0	5.94	24.4	6.13	25.5	6.13	26.7	6.13
	46.0	16.3	4.32	19.5	5.30	20.4	5.30	20.4	5.30	20.8	5.02	21.4	4.81	22.1	4.63
	52.0	7.3	1.85	7.9	1.85	8.4	1.85	8.4	1.85	9.2	1.88	10.0	1.93	11.0	1.97

Combination :Indoor/outdoor capacity ratio	Outdoor air temp. °CDB	Indoor air temp. : °CWB													
		14.0		16.0		18.0		19.0		21.0		23.0		25.0	
		TC	PI	TC	PI	TC	PI	TC	PI	TC	PI	TC	PI	TC	PI
		kW	kW	kW	kW	kW	kW	kW	kW	kW	kW	kW	kW	kW	kW
100%	-10.0	14.9	1.56	17.9	1.87	20.9	2.18	22.4	2.34	25.4	2.65	28.4	2.96	31.4	3.27
	-5.0	14.9	1.56	17.9	1.87	20.9	2.18	22.4	2.34	25.4	2.65	28.4	2.96	31.4	3.27
	0.0	14.9	1.56	17.9	1.87	20.9	2.19	22.4	2.34	25.4	2.65	28.4	2.97	31.4	3.28
	5.0	14.9	1.57	17.9	1.88	20.9	2.19	22.4	2.35	25.4	2.66	28.4	2.97	31.4	3.28
	10.0	14.9	1.57	17.9	1.88	20.9	2.20	22.4	2.35	25.4	2.67	28.4	2.98	31.4	3.29
	15.0	14.9	1.58	17.9	1.89	20.9	2.21	22.4	2.37	25.4	2.69	28.4	3.02	31.4	3.34
	20.0	14.9	1.60	17.9	1.93	20.9	2.28	22.4	2.45	25.4	2.80	28.4	3.16	31.4	3.54
	25.0	14.9	1.80	17.9	2.20	20.9	2.65	22.4	2.89	25.4	3.40	28.4	3.94	31.4	4.53
	30.0	14.9	2.25	17.9	2.77	20.9	3.32	22.4	3.61	25.4	4.23	28.4	4.88	31.4	5.58
	35.0	14.9	2.75	17.9	3.37	20.9	4.04	22.4	4.38	25.4	5.12	28.4	5.90	30.1	6.13
	40.0	14.9	3.28	17.9	4.02	20.9	4.81	22.4	5.22	25.4	6.08	26.6	6.13	27.8	6.13
	43.0	14.9	3.62	17.9	4.43	20.9	5.30	22.4	5.75	24.2	6.13	25.3	6.13	26.4	6.13
	46.0	14.8	3.94	17.7	4.82	20.1	5.51	20.3	5.34	20.7	5.05	21.2	4.82	21.9	4.63
	52.0	6.7	1.79	7.2	1.79	7.9	1.81	8.2	1.82	9.0	1.85	9.8	1.89	10.7	1.93

* Use the above table when choosing the model of outdoor unit.
See “1-8. Calculation of Actual Capacity of Indoor Unit” under the section 2.

1. Capacity of Outdoor Unit

U-8MF3E8 (Cooling)

Capacity Ratio 30-130%

TC: Total capacity (kW), PI: Power input (kW)

Combination :Indoor/outdoor capacity ratio	Outdoor air temp. °CDB	Indoor air temp. : °CWB													
		14.0		16.0		18.0		19.0		21.0		23.0		25.0	
		TC	PI	TC	PI	TC	PI	TC	PI	TC	PI	TC	PI	TC	PI
		kW	kW	kW	kW	kW	kW	kW	kW	kW	kW	kW	kW	kW	kW
90%	-10.0	13.4	1.40	16.1	1.68	18.8	1.96	20.2	2.10	22.8	2.38	25.5	2.66	28.2	2.94
	-5.0	13.4	1.40	16.1	1.68	18.8	1.97	20.2	2.11	22.8	2.39	25.5	2.67	28.2	2.95
	0.0	13.4	1.41	16.1	1.69	18.8	1.97	20.2	2.11	22.8	2.39	25.5	2.67	28.2	2.95
	5.0	13.4	1.41	16.1	1.69	18.8	1.97	20.2	2.11	22.8	2.39	25.5	2.68	28.2	2.96
	10.0	13.4	1.41	16.1	1.70	18.8	1.98	20.2	2.12	22.8	2.40	25.5	2.68	28.2	2.96
	15.0	13.4	1.42	16.1	1.70	18.8	1.99	20.2	2.13	22.8	2.41	25.5	2.71	28.2	3.00
	20.0	13.4	1.43	16.1	1.73	18.8	2.03	20.2	2.18	22.8	2.50	25.5	2.81	28.2	3.13
	25.0	13.4	1.58	16.1	1.95	18.8	2.32	20.2	2.51	22.8	2.93	25.5	3.39	28.2	3.87
	30.0	13.4	2.00	16.1	2.44	18.8	2.91	20.2	3.15	22.8	3.67	25.5	4.22	28.2	4.80
	35.0	13.4	2.44	16.1	2.97	18.8	3.54	20.2	3.83	22.8	4.45	25.5	5.11	28.2	5.79
	40.0	13.4	2.91	16.1	3.55	18.8	4.22	20.2	4.57	22.8	5.30	25.5	6.07	26.7	6.13
	43.0	13.4	3.21	16.1	3.92	18.8	4.66	20.2	5.04	22.8	5.84	24.4	6.13	25.5	6.13
	46.0	13.3	3.50	16.0	4.26	18.6	5.07	20.0	5.49	20.3	5.21	20.7	4.92	21.2	4.67
	52.0	6.5	1.76	6.9	1.74	7.4	1.73	7.6	1.73	8.3	1.74	8.9	1.75	9.7	1.77

Combination :Indoor/outdoor capacity ratio	Outdoor air temp. °CDB	Indoor air temp. : °CWB													
		14.0		16.0		18.0		19.0		21.0		23.0		25.0	
		TC	PI	TC	PI	TC	PI	TC	PI	TC	PI	TC	PI	TC	PI
		kW	kW	kW	kW	kW	kW	kW	kW	kW	kW	kW	kW	kW	kW
80%	-10.0	11.9	1.25	14.3	1.50	16.7	1.75	17.9	1.87	20.3	2.12	22.7	2.37	25.1	2.62
	-5.0	11.9	1.25	14.3	1.50	16.7	1.75	17.9	1.87	20.3	2.12	22.7	2.37	25.1	2.62
	0.0	11.9	1.25	14.3	1.50	16.7	1.75	17.9	1.87	20.3	2.12	22.7	2.37	25.1	2.62
	5.0	11.9	1.25	14.3	1.50	16.7	1.75	17.9	1.88	20.3	2.13	22.7	2.38	25.1	2.63
	10.0	11.9	1.26	14.3	1.51	16.7	1.76	17.9	1.88	20.3	2.13	22.7	2.39	25.1	2.63
	15.0	11.9	1.26	14.3	1.52	16.7	1.77	17.9	1.89	20.3	2.14	22.7	2.40	25.1	2.66
	20.0	11.9	1.27	14.3	1.53	16.7	1.79	17.9	1.92	20.3	2.20	22.7	2.47	25.1	2.75
	25.0	11.9	1.37	14.3	1.69	16.7	2.01	17.9	2.16	20.3	2.51	22.7	2.87	25.1	3.26
	30.0	11.9	1.76	14.3	2.13	16.7	2.52	17.9	2.72	20.3	3.15	22.7	3.60	25.1	4.07
	35.0	11.9	2.15	14.3	2.60	16.7	3.07	17.9	3.31	20.3	3.83	22.7	4.37	25.1	4.93
	40.0	11.9	2.56	14.3	3.10	16.7	3.67	17.9	3.96	20.3	4.57	22.7	5.21	25.1	5.87
	43.0	11.9	2.83	14.3	3.42	16.7	4.05	17.9	4.37	20.3	5.04	22.7	5.74	24.4	6.13
	46.0	11.8	3.07	14.2	3.72	16.6	4.40	17.7	4.76	20.1	5.49	20.3	5.13	20.6	4.82
	52.0	6.3	1.74	6.6	1.70	6.9	1.67	7.2	1.66	7.6	1.64	8.2	1.63	8.7	1.63

Combination :Indoor/outdoor capacity ratio	Outdoor air temp. °CDB	Indoor air temp. : °CWB													
		14.0		16.0		18.0		19.0		21.0		23.0		25.0	
		TC	PI	TC	PI	TC	PI	TC	PI	TC	PI	TC	PI	TC	PI
		kW	kW	kW	kW	kW	kW	kW	kW	kW	kW	kW	kW	kW	kW
70%	-10.0	10.5	1.09	12.5	1.31	14.6	1.53	15.7	1.64	17.8	1.85	19.9	2.07	22.0	2.29
	-5.0	10.5	1.09	12.5	1.31	14.6	1.53	15.7	1.64	17.8	1.86	19.9	2.08	22.0	2.29
	0.0	10.5	1.09	12.5	1.31	14.6	1.53	15.7	1.64	17.8	1.86	19.9	2.08	22.0	2.30
	5.0	10.5	1.10	12.5	1.32	14.6	1.53	15.7	1.64	17.8	1.86	19.9	2.08	22.0	2.30
	10.0	10.5	1.10	12.5	1.32	14.6	1.54	15.7	1.65	17.8	1.87	19.9	2.09	22.0	2.31
	15.0	10.5	1.11	12.5	1.33	14.6	1.55	15.7	1.66	17.8	1.88	19.9	2.09	22.0	2.32
	20.0	10.5	1.12	12.5	1.34	14.6	1.56	15.7	1.67	17.8	1.90	19.9	2.14	22.0	2.38
	25.0	10.5	1.17	12.5	1.44	14.6	1.71	15.7	1.84	17.8	2.12	19.9	2.41	22.0	2.71
	30.0	10.5	1.53	12.5	1.83	14.6	2.15	15.7	2.32	17.8	2.66	19.9	3.02	22.0	3.40
	35.0	10.5	1.87	12.5	2.24	14.6	2.63	15.7	2.82	17.8	3.25	19.9	3.69	22.0	4.14
	40.0	10.5	2.23	12.5	2.67	14.6	3.14	15.7	3.38	17.8	3.88	19.9	4.40	22.0	4.94
	43.0	10.5	2.45	12.5	2.95	14.6	3.47	15.7	3.74	17.8	4.29	19.9	4.86	22.0	5.45
	46.0	10.3	2.67	12.4	3.21	14.5	3.78	15.5	4.07	17.6	4.67	19.7	5.29	20.2	5.13
	52.0	6.1	1.75	6.3	1.68	6.6	1.63	6.7	1.61	7.1	1.57	7.5	1.54	7.9	1.52

Combination :Indoor/outdoor capacity ratio	Outdoor air temp. °CDB	Indoor air temp. : °CWB													
		14.0		16.0		18.0		19.0		21.0		23.0		25.0	
		TC	PI	TC	PI	TC	PI	TC	PI	TC	PI	TC	PI	TC	PI
		kW	kW	kW	kW	kW	kW	kW	kW	kW	kW	kW	kW	kW	kW
60%	-10.0	9.0	0.94	10.8	1.12	12.5	1.31	13.4	1.40	15.2	1.59	17.0	1.78	18.8	1.96
	-5.0	9.0	0.94	10.8	1.12	12.5	1.31	13.4	1.41	15.2	1.59	17.0	1.78	18.8	1.97
	0.0	9.0	0.94	10.8	1.13	12.5	1.31	13.4	1.41	15.2	1.59	17.0	1.78	18.8	1.97
	5.0	9.0	0.94	10.8	1.13	12.5	1.32	13.4	1.41	15.2	1.60	17.0	1.79	18.8	1.97
	10.0	9.0	0.94	10.8	1.13	12.5	1.32	13.4	1.41	15.2	1.60	17.0	1.79	18.8	1.98
	15.0	9.0	0.95	10.8	1.14	12.5	1.33	13.4	1.42	15.2	1.61	17.0	1.80	18.8	1.99
	20.0	9.0	0.96	10.8	1.15	12.5	1.34	13.4	1.43	15.2	1.62	17.0	1.82	18.8	2.02
	25.0	9.0	0.99	10.8	1.20	12.5	1.42	13.4	1.53	15.2	1.76	17.0	1.99	18.8	2.22
	30.0	9.0	1.32	10.8	1.56	12.5	1.81	13.4	1.94	15.2	2.22	17.0	2.50	18.8	2.79
	35.0	9.0	1.60	10.8	1.90	12.5	2.22	13.4	2.37	15.2	2.71	17.0	3.05	18.8	3.41
	40.0	9.0	1.90	10.8	2.27	12.5	2.65	13.4	2.84	15.2	3.24	17.0	3.65	18.8	4.08
	43.0	9.0	2.10	10.8	2.50	12.5	2.92	13.4	3.14	15.2	3.58	17.0	4.03	18.8	4.50
	46.0	8.9	2.28	10.6	2.72	12.4	3.18	13.3	3.42	15.1	3.90	16.9	4.39	18.6	4.90
	52.0	6.0	1.78	6.1	1.69	6.3	1.62	6.4	1.59	6.6	1.53	6.9	1.48	7.2	1.44

* Use the above table when choosing the model of outdoor unit.
See “1-8. Calculation of Actual Capacity of Indoor Unit” under the section 2.

1. Capacity of Outdoor Unit

U-8MF3E8 (Cooling)

Capacity Ratio 30-130%

TC: Total capacity (kW), PI: Power input (kW)

Combination :Indoor/outdoor capacity ratio	Outdoor air temp. °CDB	Indoor air temp. : °CWB													
		14.0		16.0		18.0		19.0		21.0		23.0		25.0	
		TC	PI	TC	PI	TC	PI	TC	PI	TC	PI	TC	PI	TC	PI
		kW	kW	kW	kW	kW	kW	kW	kW	kW	kW	kW	kW	kW	kW
50%	-10.0	7.5	0.78	9.0	0.94	10.5	1.09	11.2	1.17	12.7	1.33	14.2	1.48	15.7	1.64
	-5.0	7.5	0.78	9.0	0.94	10.5	1.09	11.2	1.17	12.7	1.33	14.2	1.48	15.7	1.64
	0.0	7.5	0.78	9.0	0.94	10.5	1.10	11.2	1.17	12.7	1.33	14.2	1.49	15.7	1.64
	5.0	7.5	0.78	9.0	0.94	10.5	1.10	11.2	1.18	12.7	1.33	14.2	1.49	15.7	1.64
	10.0	7.5	0.79	9.0	0.94	10.5	1.10	11.2	1.18	12.7	1.34	14.2	1.49	15.7	1.65
	15.0	7.5	0.79	9.0	0.95	10.5	1.11	11.2	1.18	12.7	1.34	14.2	1.50	15.7	1.66
	20.0	7.5	0.80	9.0	0.96	10.5	1.12	11.2	1.19	12.7	1.35	14.2	1.51	15.7	1.67
	25.0	7.5	0.81	9.0	0.98	10.5	1.16	11.2	1.24	12.7	1.43	14.2	1.61	15.7	1.79
	30.0	7.5	1.11	9.0	1.30	10.5	1.50	11.2	1.60	12.7	1.81	14.2	2.02	15.7	2.24
	35.0	7.5	1.35	9.0	1.58	10.5	1.83	11.2	1.95	12.7	2.21	14.2	2.47	15.7	2.74
	40.0	7.5	1.60	9.0	1.89	10.5	2.18	11.2	2.33	12.7	2.64	14.2	2.96	15.7	3.29
	43.0	7.5	1.76	9.0	2.08	10.5	2.41	11.2	2.58	12.7	2.92	14.2	3.27	15.7	3.63
	46.0	7.4	1.91	8.9	2.26	10.3	2.62	11.1	2.80	12.6	3.18	14.0	3.56	15.5	3.95
	52.0	6.0	1.90	6.0	1.74	6.1	1.65	6.2	1.61	6.3	1.53	6.5	1.46	6.7	1.40

Combination :Indoor/outdoor capacity ratio	Outdoor air temp. °CDB	Indoor air temp. : °CWB													
		14.0		16.0		18.0		19.0		21.0		23.0		25.0	
		TC	PI	TC	PI	TC	PI	TC	PI	TC	PI	TC	PI	TC	PI
		kW	kW	kW	kW	kW	kW	kW	kW	kW	kW	kW	kW	kW	kW
40%	-10.0	6.0	0.63	7.2	0.75	8.4	0.87	9.0	0.94	10.2	1.06	11.3	1.19	12.5	1.31
	-5.0	6.0	0.63	7.2	0.75	8.4	0.88	9.0	0.94	10.2	1.06	11.3	1.19	12.5	1.31
	0.0	6.0	0.63	7.2	0.75	8.4	0.88	9.0	0.94	10.2	1.06	11.3	1.19	12.5	1.31
	5.0	6.0	0.63	7.2	0.75	8.4	0.88	9.0	0.94	10.2	1.07	11.3	1.19	12.5	1.32
	10.0	6.0	0.63	7.2	0.76	8.4	0.88	9.0	0.94	10.2	1.07	11.3	1.19	12.5	1.32
	15.0	6.0	0.63	7.2	0.76	8.4	0.89	9.0	0.95	10.2	1.07	11.3	1.20	12.5	1.33
	20.0	6.0	0.64	7.2	0.77	8.4	0.89	9.0	0.96	10.2	1.08	11.3	1.21	12.5	1.34
	25.0	6.0	0.65	7.2	0.78	8.4	0.91	9.0	0.97	10.2	1.11	11.3	1.25	12.5	1.39
	30.0	6.0	0.92	7.2	1.06	8.4	1.21	9.0	1.28	10.2	1.43	11.3	1.59	12.5	1.74
	35.0	6.0	1.11	7.2	1.29	8.4	1.47	9.0	1.56	10.2	1.75	11.3	1.94	12.5	2.14
	40.0	6.0	1.31	7.2	1.52	8.4	1.75	9.0	1.86	10.2	2.09	11.3	2.32	12.5	2.56
	43.0	6.0	1.43	7.2	1.68	8.4	1.92	9.0	2.05	10.2	2.30	11.3	2.56	12.5	2.83
	46.0	5.9	1.55	7.1	1.82	8.3	2.09	8.9	2.23	10.1	2.51	11.2	2.79	12.4	3.08
	52.0	4.8	1.55	5.8	1.81	6.0	1.74	6.0	1.69	6.1	1.59	6.1	1.50	6.3	1.42

Combination :Indoor/outdoor capacity ratio	Outdoor air temp. °CDB	Indoor air temp. : °CWB													
		14.0		16.0		18.0		19.0		21.0		23.0		25.0	
		TC	PI	TC	PI	TC	PI	TC	PI	TC	PI	TC	PI	TC	PI
		kW	kW	kW	kW	kW	kW	kW	kW	kW	kW	kW	kW	kW	kW
30%	-10.0	4.5	0.47	5.4	0.56	6.3	0.66	6.7	0.70	7.6	0.80	8.5	0.89	9.4	0.98
	-5.0	4.5	0.47	5.4	0.56	6.3	0.66	6.7	0.70	7.6	0.80	8.5	0.89	9.4	0.99
	0.0	4.5	0.47	5.4	0.57	6.3	0.66	6.7	0.71	7.6	0.80	8.5	0.89	9.4	0.99
	5.0	4.5	0.47	5.4	0.57	6.3	0.66	6.7	0.71	7.6	0.80	8.5	0.89	9.4	0.99
	10.0	4.5	0.47	5.4	0.57	6.3	0.66	6.7	0.71	7.6	0.80	8.5	0.90	9.4	0.99
	15.0	4.5	0.48	5.4	0.57	6.3	0.67	6.7	0.71	7.6	0.81	8.5	0.90	9.4	1.00
	20.0	4.5	0.48	5.4	0.58	6.3	0.67	6.7	0.72	7.6	0.81	8.5	0.91	9.4	1.00
	25.0	4.5	0.49	5.4	0.59	6.3	0.68	6.7	0.73	7.6	0.83	8.5	0.92	9.4	1.02
	30.0	4.5	0.74	5.4	0.84	6.3	0.94	6.7	0.99	7.6	1.09	8.5	1.20	9.4	1.30
	35.0	4.5	0.88	5.4	1.01	6.3	1.13	6.7	1.19	7.6	1.33	8.5	1.46	9.4	1.59
	40.0	4.5	1.03	5.4	1.18	6.3	1.34	6.7	1.42	7.6	1.58	8.5	1.74	9.4	1.90
	43.0	4.5	1.12	5.4	1.29	6.3	1.47	6.7	1.56	7.6	1.73	8.5	1.91	9.4	2.09
	46.0	4.4	1.21	5.3	1.40	6.2	1.59	6.7	1.69	7.5	1.88	8.4	2.08	9.3	2.28
	52.0	3.6	1.21	4.4	1.40	5.1	1.59	5.4	1.69	5.9	1.78	6.0	1.66	6.0	1.55

* Use the above table when choosing the model of outdoor unit.
See “1-8. Calculation of Actual Capacity of Indoor Unit” under the section 2.

1. Capacity of Outdoor Unit

1-2. U-8MF3E8 (Heating)

Capacity Ratio 30-130%

TC: Total capacity (kW), PI: Power input (kW)

Combination :Indoor/outdoor capacity ratio	Outdoor air temp.		Indoor air temp. : °CDB													
			16.0		17.0		19.0		20.0		23.0		25.0		30.0	
			TC	PI	TC	PI	TC	PI	TC	PI	TC	PI	TC	PI	TC	PI
	°CDB	°CWB	kW	kW	kW	kW	kW	kW	kW	kW	kW	kW	kW	kW	kW	kW
130%	-19.8	-20.0	16.6	5.26	16.2	5.17	15.4	4.99	14.9	4.89	13.6	4.57	12.7	4.34	10.2	3.66
	-14.7	-15.0	17.9	5.41	17.4	5.32	16.5	5.12	16.1	5.02	14.7	4.68	13.7	4.44	11.1	3.74
	-9.6	-10.0	19.2	5.59	18.8	5.49	17.8	5.28	17.3	5.17	15.8	4.82	14.8	4.56	12.0	3.83
	-4.4	-5.0	22.0	6.02	21.5	5.91	20.5	5.66	19.9	5.53	18.2	5.13	17.0	4.84	13.8	4.03
	-1.8	-2.5	24.1	6.24	23.5	6.13	22.4	5.90	21.7	5.77	19.9	5.36	18.6	5.05	15.0	4.19
	0.8	0.0	26.3	6.39	25.6	6.27	24.4	6.02	23.7	5.89	21.7	5.46	20.2	5.14	16.4	4.26
	2.8	2.0	27.8	6.47	27.2	6.35	25.8	6.09	25.1	5.95	23.0	5.51	21.5	5.19	16.9	4.11
	6.0	5.0	30.4	6.60	29.7	6.48	27.9	6.08	26.9	5.85	23.9	5.16	21.9	4.71	16.9	3.64
	7.0	6.0	30.9	6.49	29.9	6.25	27.9	5.80	26.9	5.58	23.9	4.92	21.9	4.50	16.9	3.49
	8.6	7.5	30.9	6.01	29.9	5.79	27.9	5.38	26.9	5.18	23.9	4.58	21.9	4.20	16.9	3.27
	11.2	10.0	30.9	5.24	29.9	5.06	27.9	4.72	26.9	4.55	23.9	4.04	21.9	3.72	16.9	2.92
	16.4	15.0	30.9	3.88	29.9	3.77	27.9	3.54	26.9	3.42	23.9	3.09	21.9	2.86	16.9	2.31
	24.0	18.0	30.9	3.64	29.9	3.53	27.9	3.32	26.9	3.21	23.9	2.89	21.9	2.68	16.9	2.15

Combination :Indoor/outdoor capacity ratio	Outdoor air temp.		Indoor air temp. : °CDB													
			16.0		17.0		19.0		20.0		23.0		25.0		30.0	
			TC	PI	TC	PI	TC	PI	TC	PI	TC	PI	TC	PI	TC	PI
	°CDB	°CWB	kW	kW	kW	kW	kW	kW	kW	kW	kW	kW	kW	kW	kW	kW
120%	-19.8	-20.0	16.6	5.21	16.2	5.13	15.3	4.94	14.9	4.85	13.6	4.53	12.6	4.29	10.2	3.63
	-14.7	-15.0	17.9	5.36	17.4	5.27	16.5	5.08	16.0	4.97	14.6	4.64	13.6	4.39	11.0	3.70
	-9.6	-10.0	19.2	5.54	18.8	5.44	17.8	5.24	17.3	5.13	15.8	4.78	14.7	4.52	11.9	3.80
	-4.4	-5.0	22.0	5.97	21.5	5.86	20.4	5.63	19.9	5.50	18.1	5.08	16.9	4.80	13.7	4.00
	-1.8	-2.5	24.1	6.16	23.5	6.06	22.3	5.83	21.7	5.71	19.8	5.30	18.5	5.00	15.0	4.15
	0.8	0.0	26.2	6.31	25.6	6.20	24.3	5.95	23.7	5.82	21.6	5.39	20.2	5.08	16.4	4.22
	2.8	2.0	27.8	6.39	27.1	6.27	25.8	6.01	25.1	5.88	22.9	5.45	21.4	5.12	16.5	3.96
	6.0	5.0	30.1	6.44	29.2	6.21	27.2	5.77	26.3	5.55	23.3	4.92	21.4	4.50	16.5	3.51
	7.0	6.0	30.1	6.13	29.2	5.91	27.2	5.50	26.3	5.29	23.3	4.69	21.4	4.30	16.5	3.36
	8.6	7.5	30.1	5.67	29.2	5.48	27.2	5.10	26.3	4.91	23.3	4.37	21.4	4.01	16.5	3.15
	11.2	10.0	30.1	4.94	29.2	4.78	27.2	4.47	26.3	4.31	23.3	3.85	21.4	3.55	16.5	2.81
	16.4	15.0	30.1	3.65	29.2	3.55	27.2	3.34	26.3	3.24	23.3	2.94	21.4	2.73	16.5	2.22
	24.0	18.0	30.1	3.56	29.2	3.46	27.2	3.25	26.3	3.15	23.3	2.83	21.4	2.63	16.5	2.11

Combination :Indoor/outdoor capacity ratio	Outdoor air temp.		Indoor air temp. : °CDB													
			16.0		17.0		19.0		20.0		23.0		25.0		30.0	
			TC	PI	TC	PI	TC	PI	TC	PI	TC	PI	TC	PI	TC	PI
	°CDB	°CWB	kW	kW	kW	kW	kW	kW	kW	kW	kW	kW	kW	kW	kW	kW
110%	-19.8	-20.0	16.6	5.16	16.1	5.08	15.3	4.89	14.9	4.80	13.5	4.48	12.6	4.25	10.1	3.59
	-14.7	-15.0	17.8	5.32	17.4	5.22	16.5	5.03	16.0	4.93	14.6	4.60	13.6	4.35	11.0	3.67
	-9.6	-10.0	19.2	5.50	18.7	5.40	17.8	5.19	17.3	5.09	15.7	4.74	14.7	4.48	11.9	3.76
	-4.4	-5.0	22.0	5.91	21.5	5.81	20.4	5.58	19.8	5.46	18.1	5.06	16.9	4.75	13.7	3.97
	-1.8	-2.5	24.1	6.09	23.5	5.99	22.3	5.76	21.7	5.64	19.8	5.24	18.5	4.95	14.9	4.11
	0.8	0.0	26.2	6.23	25.6	6.12	24.3	5.88	23.6	5.75	21.6	5.33	20.1	5.02	16.1	4.11
	2.8	2.0	27.8	6.31	27.1	6.19	25.7	5.94	25.0	5.81	22.8	5.35	20.9	4.90	16.1	3.81
	6.0	5.0	29.4	6.08	28.5	5.87	26.6	5.47	25.6	5.27	22.8	4.69	20.9	4.31	16.1	3.37
	7.0	6.0	29.4	5.78	28.5	5.59	26.6	5.21	25.6	5.02	22.8	4.47	20.9	4.11	16.1	3.23
	8.6	7.5	29.4	5.34	28.5	5.17	26.6	4.83	25.6	4.66	22.8	4.16	20.9	3.83	16.1	3.03
	11.2	10.0	29.4	4.66	28.5	4.51	26.6	4.23	25.6	4.09	22.8	3.67	20.9	3.39	16.1	2.71
	16.4	15.0	29.4	3.48	28.5	3.38	26.6	3.18	25.6	3.08	22.8	2.79	20.9	2.61	16.1	2.14
	24.0	18.0	29.4	3.48	28.5	3.38	26.6	3.18	25.6	3.08	22.8	2.77	20.9	2.57	16.1	2.06

Combination :Indoor/outdoor capacity ratio	Outdoor air temp.		Indoor air temp. : °CDB													
			16.0		17.0		19.0		20.0		23.0		25.0		30.0	
			TC	PI	TC	PI	TC	PI	TC	PI	TC	PI	TC	PI	TC	PI
	°CDB	°CWB	kW	kW	kW	kW	kW	kW	kW	kW	kW	kW	kW	kW	kW	kW
100%	-19.8	-20.0	16.5	5.11	16.1	5.03	15.3	4.85	14.8	4.75	13.5	4.44	12.5	4.21	10.1	3.56
	-14.7	-15.0	17.8	5.27	17.3	5.18	16.4	4.99	16.0	4.88	14.5	4.56	13.5	4.32	10.9	3.64
	-9.6	-10.0	19.2	5.45	18.7	5.36	17.7	5.15	17.2	5.04	15.7	4.70	14.6	4.44	11.8	3.73
	-4.4	-5.0	22.0	5.85	21.5	5.75	20.4	5.54	19.8	5.42	18.1	5.03	16.8	4.73	13.6	3.93
	-1.8	-2.5	24.0	6.02	23.5	5.92	22.3	5.70	21.6	5.58	19.7	5.19	18.4	4.89	14.9	4.07
	0.8	0.0	26.2	6.15	25.6	6.04	24.3	5.80	23.6	5.68	21.5	5.26	20.1	4.96	15.7	3.95
	2.8	2.0	27.7	6.22	27.1	6.11	25.7	5.87	25.0	5.74	22.2	5.10	20.4	4.68	15.7	3.66
	6.0	5.0	28.7	5.74	27.8	5.55	25.9	5.18	25.0	5.00	22.2	4.47	20.4	4.11	15.7	3.24
	7.0	6.0	28.7	5.45	27.8	5.28	25.9	4.93	25.0	4.76	22.2	4.25	20.4	3.92	15.7	3.10
	8.6	7.5	28.7	5.03	27.8	4.87	25.9	4.56	25.0	4.41	22.2	3.96	20.4	3.65	15.7	2.91
	11.2	10.0	28.7	4.37	27.8	4.25	25.9	3.99	25.0	3.87	22.2	3.49	20.4	3.24	15.7	2.61
	16.4	15.0	28.7	3.41	27.8	3.31	25.9	3.11	25.0	3.01	22.2	2.71	20.4	2.52	15.7	2.04
	24.0	18.0	28.7	3.41	27.8	3.31	25.9	3.11	25.0	3.01	22.2	2.71	20.4	2.52	15.7	2.02

* Use the above table when choosing the model of outdoor unit.
See “1-8. Calculation of Actual Capacity of Indoor Unit” under the section 2.

1. Capacity of Outdoor Unit

U-8MF3E8 (Heating)

Capacity Ratio 30-130%

TC: Total capacity (kW), PI: Power input (kW)

Combination :Indoor/outdoor capacity ratio	Outdoor air temp.		Indoor air temp. : °CDB													
			16.0		17.0		19.0		20.0		23.0		25.0		30.0	
			TC	PI	TC	PI	TC	PI	TC	PI	TC	PI	TC	PI	TC	PI
	°CDB	°CWB	kW	kW	kW	kW	kW	kW	kW	kW	kW	kW	kW	kW	kW	kW
90%	-19.8	-20.0	16.4	4.94	16.0	4.85	15.1	4.68	14.7	4.58	13.3	4.28	12.3	4.06	9.9	3.43
	-14.7	-15.0	17.7	5.09	17.2	5.01	16.3	4.82	15.8	4.72	14.4	4.40	13.4	4.17	10.7	3.51
	-9.6	-10.0	19.1	5.30	18.6	5.19	17.6	4.99	17.1	4.89	15.5	4.55	14.5	4.30	11.6	3.61
	-4.4	-5.0	21.9	5.60	21.4	5.52	20.2	5.32	19.7	5.21	17.9	4.86	16.6	4.59	13.4	3.82
	-1.8	-2.5	24.0	5.74	23.4	5.64	22.1	5.43	21.5	5.32	19.5	4.95	18.2	4.68	14.2	3.75
	0.8	0.0	25.8	5.74	25.0	5.57	23.3	5.24	22.5	5.07	20.0	4.56	18.3	4.23	14.2	3.37
	2.8	2.0	25.8	5.24	25.0	5.09	23.3	4.80	22.5	4.65	20.0	4.20	18.3	3.90	14.2	3.16
	6.0	5.0	25.8	4.56	25.0	4.45	23.3	4.23	22.5	4.12	20.0	3.76	18.3	3.50	14.2	2.81
	7.0	6.0	25.8	4.46	25.0	4.33	23.3	4.09	22.5	3.96	20.0	3.59	18.3	3.34	14.2	2.70
	8.6	7.5	25.8	4.10	25.0	4.00	23.3	3.78	22.5	3.67	20.0	3.33	18.3	3.11	14.2	2.53
	11.2	10.0	25.8	3.55	25.0	3.47	23.3	3.29	22.5	3.20	20.0	2.94	18.3	2.75	14.2	2.27
	16.4	15.0	25.8	3.10	25.0	3.01	23.3	2.83	22.5	2.74	20.0	2.48	18.3	2.30	14.2	1.85
	24.0	18.0	25.8	3.10	25.0	3.01	23.3	2.83	22.5	2.74	20.0	2.48	18.3	2.30	14.2	1.85

Combination :Indoor/outdoor capacity ratio	Outdoor air temp.		Indoor air temp. : °CDB													
			16.0		17.0		19.0		20.0		23.0		25.0		30.0	
			TC	PI	TC	PI	TC	PI	TC	PI	TC	PI	TC	PI	TC	PI
	°CDB	°CWB	kW	kW	kW	kW	kW	kW	kW	kW	kW	kW	kW	kW	kW	kW
80%	-19.8	-20.0	16.3	4.80	15.9	4.71	15.0	4.54	14.6	4.45	13.2	4.16	12.2	3.94	9.7	3.33
	-14.7	-15.0	17.6	4.94	17.2	4.88	16.2	4.69	15.7	4.59	14.3	4.28	13.2	4.05	10.6	3.41
	-9.6	-10.0	19.0	5.17	18.5	5.08	17.5	4.88	17.0	4.77	15.4	4.43	14.3	4.18	11.5	3.51
	-4.4	-5.0	21.9	5.39	21.3	5.31	20.2	5.12	19.6	5.02	17.8	4.69	16.3	4.36	12.6	3.51
	-1.8	-2.5	23.0	5.14	22.2	5.01	20.7	4.75	20.0	4.62	17.8	4.20	16.3	3.92	12.6	3.19
	0.8	0.0	23.0	4.50	22.2	4.40	20.7	4.20	20.0	4.10	17.8	3.77	16.3	3.53	12.6	2.90
	2.8	2.0	23.0	4.17	22.2	4.08	20.7	3.90	20.0	3.81	17.8	3.51	16.3	3.29	12.6	2.71
	6.0	5.0	23.0	3.70	22.2	3.63	20.7	3.47	20.0	3.39	17.8	3.13	16.3	2.94	12.6	2.42
	7.0	6.0	23.0	3.59	22.2	3.51	20.7	3.34	20.0	3.26	17.8	2.99	16.3	2.81	12.6	2.32
	8.6	7.5	23.0	3.30	22.2	3.23	20.7	3.08	20.0	3.01	17.8	2.78	16.3	2.61	12.6	2.18
	11.2	10.0	23.0	2.84	22.2	2.79	20.7	2.68	20.0	2.62	17.8	2.44	16.3	2.31	12.6	1.95
	16.4	15.0	23.0	2.79	22.2	2.71	20.7	2.56	20.0	2.48	17.8	2.24	16.3	2.08	12.6	1.69
	24.0	18.0	23.0	2.79	22.2	2.71	20.7	2.56	20.0	2.48	17.8	2.24	16.3	2.08	12.6	1.69

Combination :Indoor/outdoor capacity ratio	Outdoor air temp.		Indoor air temp. : °CDB													
			16.0		17.0		19.0		20.0		23.0		25.0		30.0	
			TC	PI	TC	PI	TC	PI	TC	PI	TC	PI	TC	PI	TC	PI
	°CDB	°CWB	kW	kW	kW	kW	kW	kW	kW	kW	kW	kW	kW	kW	kW	kW
70%	-19.8	-20.0	16.4	4.73	16.0	4.65	15.1	4.48	14.6	4.39	13.2	4.09	12.2	3.88	9.7	3.28
	-14.7	-15.0	17.8	4.93	17.3	4.83	16.3	4.63	15.8	4.54	14.3	4.22	13.3	3.99	10.6	3.36
	-9.6	-10.0	19.2	5.07	18.7	5.00	17.7	4.82	17.1	4.73	15.5	4.38	14.3	4.09	11.0	3.32
	-4.4	-5.0	20.1	4.55	19.4	4.45	18.1	4.25	17.5	4.15	15.6	3.83	14.3	3.60	11.0	2.98
	-1.8	-2.5	20.1	4.07	19.4	4.00	18.1	3.84	17.5	3.75	15.6	3.47	14.3	3.27	11.0	2.72
	0.8	0.0	20.1	3.64	19.4	3.57	18.1	3.44	17.5	3.36	15.6	3.13	14.3	2.96	11.0	2.47
	2.8	2.0	20.1	3.36	19.4	3.30	18.1	3.18	17.5	3.12	15.6	2.91	14.3	2.75	11.0	2.31
	6.0	5.0	20.1	2.96	19.4	2.91	18.1	2.81	17.5	2.76	15.6	2.58	14.3	2.44	11.0	2.05
	7.0	6.0	20.1	2.84	19.4	2.79	18.1	2.69	17.5	2.64	15.6	2.46	14.3	2.33	11.0	1.98
	8.6	7.5	20.1	2.60	19.4	2.56	18.1	2.48	17.5	2.43	15.6	2.28	14.3	2.17	11.0	1.86
	11.2	10.0	20.1	2.49	19.4	2.42	18.1	2.28	17.5	2.21	15.6	2.00	14.3	1.92	11.0	1.66
	16.4	15.0	20.1	2.49	19.4	2.42	18.1	2.28	17.5	2.21	15.6	2.00	14.3	1.86	11.0	1.52
	24.0	18.0	20.1	2.49	19.4	2.42	18.1	2.28	17.5	2.21	15.6	2.00	14.3	1.86	11.0	1.52

Combination :Indoor/outdoor capacity ratio	Outdoor air temp.		Indoor air temp. : °CDB													
			16.0		17.0		19.0		20.0		23.0		25.0		30.0	
			TC	PI	TC	PI	TC	PI	TC	PI	TC	PI	TC	PI	TC	PI
	°CDB	°CWB	kW	kW	kW	kW	kW	kW	kW	kW	kW	kW	kW	kW	kW	kW
60%	-19.8	-20.0	16.9	4.80	16.5	4.71	15.5	4.54	15.0	4.44	13.3	4.07	12.2	3.81	9.4	3.14
	-14.7	-15.0	17.2	4.61	16.7	4.51	15.6	4.31	15.0	4.20	13.3	3.82	12.2	3.59	9.4	2.95
	-9.6	-10.0	17.2	4.22	16.7	4.15	15.6	3.99	15.0	3.90	13.3	3.63	12.2	3.42	9.4	2.81
	-4.4	-5.0	17.2	3.64	16.7	3.58	15.6	3.45	15.0	3.38	13.3	3.16	12.2	2.99	9.4	2.52
	-1.8	-2.5	17.2	3.26	16.7	3.21	15.6	3.11	15.0	3.05	13.3	2.86	12.2	2.71	9.4	2.30
	0.8	0.0	17.2	2.90	16.7	2.86	15.6	2.77	15.0	2.72	13.3	2.56	12.2	2.44	9.4	2.08
	2.8	2.0	17.2	2.66	16.7	2.63	15.6	2.56	15.0	2.52	13.3	2.38	12.2	2.27	9.4	1.95
	6.0	5.0	17.2	2.33	16.7	2.30	15.6	2.24	15.0	2.21	13.3	2.09	12.2	2.00	9.4	1.72
	7.0	6.0	17.2	2.20	16.7	2.18	15.6	2.12	15.0	2.09	13.3	1.99	12.2	1.91	9.4	1.66
	8.6	7.5	17.2	2.18	16.7	2.12	15.6	2.00	15.0	1.94	13.3	1.85	12.2	1.78	9.4	1.56
	11.2	10.0	17.2	2.18	16.7	2.12	15.6	2.00	15.0	1.94	13.3	1.77	12.2	1.65	9.4	1.40
	16.4	15.0	17.2	2.18	16.7	2.12	15.6	2.00	15.0	1.94	13.3	1.77	12.2	1.65	9.4	1.35
	24.0	18.0	17.2	2.18	16.7	2.12	15.6	2.00	15.0	1.94	13.3	1.77	12.2	1.65	9.4	1.35

* Use the above table when choosing the model of outdoor unit.
See “1-8. Calculation of Actual Capacity of Indoor Unit” under the section 2.

1. Capacity of Outdoor Unit

U-8MF3E8 (Heating)

Capacity Ratio 30-130%

TC: Total capacity (kW), PI: Power input (kW)

Combination :Indoor/outdoor capacity ratio	Outdoor air temp.		Indoor air temp. : °CDB													
			16.0		17.0		19.0		20.0		23.0		25.0		30.0	
			TC	PI	TC	PI	TC	PI	TC	PI	TC	PI	TC	PI	TC	PI
	°CDB	°CWB	kW	kW	kW	kW	kW	kW	kW	kW	kW	kW	kW	kW	kW	kW
50%	-19.8	-20.0	14.4	3.90	13.9	3.84	13.0	3.68	12.5	3.59	11.1	3.31	10.2	3.11	7.9	2.60
	-14.7	-15.0	14.4	3.63	13.9	3.57	13.0	3.45	12.5	3.38	11.1	3.16	10.2	2.98	7.9	2.47
	-9.6	-10.0	14.4	3.36	13.9	3.31	13.0	3.20	12.5	3.14	11.1	2.95	10.2	2.80	7.9	2.36
	-4.4	-5.0	14.4	2.87	13.9	2.84	13.0	2.76	12.5	2.71	11.1	2.56	10.2	2.44	7.9	2.09
	-1.8	-2.5	14.4	2.56	13.9	2.54	13.0	2.47	12.5	2.43	11.1	2.31	10.2	2.21	7.9	1.90
	0.8	0.0	14.4	2.27	13.9	2.25	13.0	2.20	12.5	2.17	11.1	2.07	10.2	1.98	7.9	1.73
	2.8	2.0	14.4	2.08	13.9	2.06	13.0	2.02	12.5	2.00	11.1	1.91	10.2	1.84	7.9	1.61
	6.0	5.0	14.4	1.87	13.9	1.82	13.0	1.74	12.5	1.72	11.1	1.66	10.2	1.61	7.9	1.42
	7.0	6.0	14.4	1.87	13.9	1.82	13.0	1.73	12.5	1.68	11.1	1.58	10.2	1.53	7.9	1.37
	8.6	7.5	14.4	1.87	13.9	1.82	13.0	1.73	12.5	1.68	11.1	1.53	10.2	1.43	7.9	1.29
	11.2	10.0	14.4	1.87	13.9	1.82	13.0	1.73	12.5	1.68	11.1	1.53	10.2	1.43	7.9	1.18
	16.4	15.0	14.4	1.87	13.9	1.82	13.0	1.73	12.5	1.68	11.1	1.53	10.2	1.43	7.9	1.18
	24.0	18.0	14.4	1.87	13.9	1.82	13.0	1.73	12.5	1.68	11.1	1.53	10.2	1.43	7.9	1.18

Combination :Indoor/outdoor capacity ratio	Outdoor air temp.		Indoor air temp. : °CDB													
			16.0		17.0		19.0		20.0		23.0		25.0		30.0	
			TC	PI	TC	PI	TC	PI	TC	PI	TC	PI	TC	PI	TC	PI
	°CDB	°CWB	kW	kW	kW	kW	kW	kW	kW	kW	kW	kW	kW	kW	kW	kW
40%	-19.8	-20.0	11.5	3.03	11.1	2.99	10.4	2.90	10.0	2.84	8.9	2.65	8.1	2.50	6.3	2.10
	-14.7	-15.0	11.5	2.80	11.1	2.77	10.4	2.69	10.0	2.65	8.9	2.50	8.1	2.38	6.3	2.00
	-9.6	-10.0	11.5	2.59	11.1	2.56	10.4	2.49	10.0	2.46	8.9	2.32	8.1	2.22	6.3	1.92
	-4.4	-5.0	11.5	2.21	11.1	2.19	10.4	2.14	10.0	2.11	8.9	2.01	8.1	1.94	6.3	1.69
	-1.8	-2.5	11.5	1.96	11.1	1.95	10.4	1.92	10.0	1.90	8.9	1.82	8.1	1.75	6.3	1.54
	0.8	0.0	11.5	1.73	11.1	1.72	10.4	1.69	10.0	1.68	8.9	1.62	8.1	1.57	6.3	1.39
	2.8	2.0	11.5	1.57	11.1	1.55	10.4	1.54	10.0	1.53	8.9	1.48	8.1	1.44	6.3	1.29
	6.0	5.0	11.5	1.57	11.1	1.53	10.4	1.45	10.0	1.41	8.9	1.29	8.1	1.26	6.3	1.15
	7.0	6.0	11.5	1.57	11.1	1.53	10.4	1.45	10.0	1.41	8.9	1.29	8.1	1.21	6.3	1.12
	8.6	7.5	11.5	1.57	11.1	1.53	10.4	1.45	10.0	1.41	8.9	1.29	8.1	1.21	6.3	1.05
	11.2	10.0	11.5	1.57	11.1	1.53	10.4	1.45	10.0	1.41	8.9	1.29	8.1	1.21	6.3	1.01
	16.4	15.0	11.5	1.57	11.1	1.53	10.4	1.45	10.0	1.41	8.9	1.29	8.1	1.21	6.3	1.01
	24.0	18.0	11.5	1.57	11.1	1.53	10.4	1.45	10.0	1.41	8.9	1.29	8.1	1.21	6.3	1.01

Combination :Indoor/outdoor capacity ratio	Outdoor air temp.		Indoor air temp. : °CDB													
			16.0		17.0		19.0		20.0		23.0		25.0		30.0	
			TC	PI	TC	PI	TC	PI	TC	PI	TC	PI	TC	PI	TC	PI
	°CDB	°CWB	kW	kW	kW	kW	kW	kW	kW	kW	kW	kW	kW	kW	kW	kW
30%	-19.8	-20.0	8.6	2.23	8.3	2.21	7.8	2.15	7.5	2.12	6.7	2.02	6.1	1.92	4.7	1.63
	-14.7	-15.0	8.6	2.07	8.3	2.05	7.8	2.00	7.5	1.98	6.7	1.88	6.1	1.81	4.7	1.57
	-9.6	-10.0	8.6	1.91	8.3	1.89	7.8	1.86	7.5	1.83	6.7	1.76	6.1	1.69	4.7	1.48
	-4.4	-5.0	8.6	1.62	8.3	1.61	7.8	1.59	7.5	1.58	6.7	1.52	6.1	1.47	4.7	1.31
	-1.8	-2.5	8.6	1.42	8.3	1.42	7.8	1.41	7.5	1.40	6.7	1.36	6.1	1.32	4.7	1.19
	0.8	0.0	8.6	1.26	8.3	1.23	7.8	1.23	7.5	1.23	6.7	1.21	6.1	1.18	4.7	1.08
	2.8	2.0	8.6	1.26	8.3	1.23	7.8	1.17	7.5	1.14	6.7	1.11	6.1	1.09	4.7	1.01
	6.0	5.0	8.6	1.26	8.3	1.23	7.8	1.17	7.5	1.14	6.7	1.05	6.1	0.99	4.7	0.91
	7.0	6.0	8.6	1.26	8.3	1.23	7.8	1.17	7.5	1.14	6.7	1.05	6.1	0.99	4.7	0.88
	8.6	7.5	8.6	1.26	8.3	1.23	7.8	1.17	7.5	1.14	6.7	1.05	6.1	0.99	4.7	0.85
	11.2	10.0	8.6	1.26	8.3	1.23	7.8	1.17	7.5	1.14	6.7	1.05	6.1	0.99	4.7	0.85
	16.4	15.0	8.6	1.26	8.3	1.23	7.8	1.17	7.5	1.14	6.7	1.05	6.1	0.99	4.7	0.85
	24.0	18.0	8.6	1.26	8.3	1.23	7.8	1.17	7.5	1.14	6.7	1.05	6.1	0.99	4.7	0.85

* Use the above table when choosing the model of outdoor unit.
See “1-8. Calculation of Actual Capacity of Indoor Unit” under the section 2.

1. Capacity of Outdoor Unit

1-3. U-10MF3E8 (Cooling)

Capacity Ratio 30-130%

TC: Total capacity (kW), PI: Power input (kW)

Combination :Indoor/outdoor capacity ratio	Outdoor air temp. °CDB	Indoor air temp. : °CWB													
		14.0		16.0		18.0		19.0		21.0		23.0		25.0	
		TC	PI	TC	PI	TC	PI	TC	PI	TC	PI	TC	PI	TC	PI
		kW	kW	kW	kW	kW	kW	kW	kW	kW	kW	kW	kW	kW	kW
130%	-10.0	24.3	2.66	29.1	3.19	30.1	3.30	30.1	3.30	34.1	3.74	38.1	4.18	42.1	4.62
	-5.0	24.3	2.66	29.1	3.19	30.1	3.30	30.1	3.30	34.1	3.74	38.1	4.18	42.1	4.62
	0.0	24.3	2.66	29.1	3.19	30.1	3.31	30.1	3.31	34.1	3.75	38.1	4.19	42.1	4.62
	5.0	24.3	2.67	29.1	3.20	30.1	3.31	30.1	3.31	34.1	3.75	38.1	4.19	42.1	4.63
	10.0	24.3	2.67	29.1	3.20	30.1	3.32	30.1	3.32	34.1	3.77	38.1	4.22	42.1	4.66
	15.0	24.3	2.68	29.1	3.22	30.1	3.37	30.1	3.37	34.1	3.84	38.1	4.30	42.1	4.75
	20.0	24.3	2.74	29.1	3.32	30.1	3.53	30.1	3.53	34.1	4.05	38.1	4.77	42.1	5.56
	25.0	24.3	3.10	29.1	3.88	30.1	4.36	30.1	4.36	34.1	5.18	38.1	6.06	42.1	7.01
	30.0	24.3	3.90	29.1	4.87	30.1	5.41	30.1	5.41	34.1	6.39	38.1	7.44	41.6	8.30
	35.0	24.3	4.77	29.1	5.92	30.1	6.54	30.1	6.54	34.1	7.69	36.9	8.30	38.4	8.30
	40.0	24.3	5.70	29.1	7.06	30.1	7.75	30.1	7.75	32.5	8.30	34.0	8.30	35.4	8.30
	43.0	24.3	6.29	29.1	7.79	29.6	8.30	29.6	8.30	31.0	8.30	31.9	7.97	32.8	7.63
	46.0	23.9	6.20	23.9	6.20	23.9	6.20	23.9	6.20	24.8	5.98	25.8	5.81	27.0	5.69
	52.0	10.0	2.44	10.7	2.44	10.7	2.44	10.7	2.44	11.9	2.53	13.2	2.63	14.7	2.73

Combination :Indoor/outdoor capacity ratio	Outdoor air temp. °CDB	Indoor air temp. : °CWB													
		14.0		16.0		18.0		19.0		21.0		23.0		25.0	
		TC	PI	TC	PI	TC	PI	TC	PI	TC	PI	TC	PI	TC	PI
		kW	kW	kW	kW	kW	kW	kW	kW	kW	kW	kW	kW	kW	kW
120%	-10.0	22.4	2.45	26.9	2.94	29.4	3.22	29.4	3.22	33.3	3.65	37.2	4.08	41.2	4.51
	-5.0	22.4	2.45	26.9	2.95	29.4	3.22	29.4	3.22	33.3	3.66	37.2	4.08	41.2	4.51
	0.0	22.4	2.46	26.9	2.95	29.4	3.23	29.4	3.23	33.3	3.66	37.2	4.09	41.2	4.52
	5.0	22.4	2.46	26.9	2.95	29.4	3.24	29.4	3.24	33.3	3.66	37.2	4.10	41.2	4.53
	10.0	22.4	2.47	26.9	2.96	29.4	3.24	29.4	3.24	33.3	3.68	37.2	4.12	41.2	4.56
	15.0	22.4	2.48	26.9	2.98	29.4	3.29	29.4	3.29	33.3	3.75	37.2	4.20	41.2	4.64
	20.0	22.4	2.53	26.9	3.07	29.4	3.44	29.4	3.44	33.3	3.94	37.2	4.59	41.2	5.34
	25.0	22.4	2.87	26.9	3.57	29.4	4.22	29.4	4.22	33.3	5.00	37.2	5.84	41.2	6.75
	30.0	22.4	3.60	26.9	4.48	29.4	5.24	29.4	5.24	33.3	6.18	37.2	7.18	41.2	8.26
	35.0	22.4	4.40	26.9	5.45	29.4	6.33	29.4	6.33	33.3	7.44	36.6	8.30	38.1	8.30
	40.0	22.4	5.25	26.9	6.50	29.4	7.52	29.4	7.52	32.3	8.30	33.7	8.30	35.2	8.30
	43.0	22.4	5.79	26.9	7.16	29.4	8.28	29.4	8.28	30.8	8.30	31.7	8.02	32.6	7.65
	46.0	22.2	6.22	23.8	6.22	23.8	6.22	23.8	6.22	24.6	5.98	25.5	5.79	26.7	5.66
	52.0	9.4	2.40	10.3	2.40	10.5	2.40	10.5	2.40	11.6	2.48	12.9	2.57	14.3	2.66

Combination :Indoor/outdoor capacity ratio	Outdoor air temp. °CDB	Indoor air temp. : °CWB													
		14.0		16.0		18.0		19.0		21.0		23.0		25.0	
		TC	PI	TC	PI	TC	PI	TC	PI	TC	PI	TC	PI	TC	PI
		kW	kW	kW	kW	kW	kW	kW	kW	kW	kW	kW	kW	kW	kW
110%	-10.0	20.5	2.25	24.6	2.70	28.7	3.14	28.7	3.14	32.5	3.56	36.4	3.98	40.2	4.40
	-5.0	20.5	2.25	24.6	2.70	28.7	3.15	28.7	3.15	32.5	3.57	36.4	3.99	40.2	4.41
	0.0	20.5	2.25	24.6	2.70	28.7	3.15	28.7	3.15	32.5	3.57	36.4	3.99	40.2	4.41
	5.0	20.5	2.26	24.6	2.71	28.7	3.16	28.7	3.16	32.5	3.58	36.4	4.00	40.2	4.42
	10.0	20.5	2.26	24.6	2.72	28.7	3.17	28.7	3.17	32.5	3.59	36.4	4.02	40.2	4.45
	15.0	20.5	2.27	24.6	2.73	28.7	3.20	28.7	3.20	32.5	3.65	36.4	4.10	40.2	4.53
	20.0	20.5	2.32	24.6	2.81	28.7	3.35	28.7	3.35	32.5	3.84	36.4	4.42	40.2	5.13
	25.0	20.5	2.63	24.6	3.27	28.7	4.08	28.7	4.08	32.5	4.82	36.4	5.63	40.2	6.50
	30.0	20.5	3.31	24.6	4.10	28.7	5.07	28.7	5.07	32.5	5.97	36.4	6.93	40.2	7.96
	35.0	20.5	4.03	24.6	4.99	28.7	6.13	28.7	6.13	32.5	7.20	36.3	8.29	37.8	8.30
	40.0	20.5	4.81	24.6	5.94	28.7	7.28	28.7	7.28	32.1	8.30	33.5	8.30	34.9	8.30
	43.0	20.5	5.31	24.6	6.55	28.7	8.02	28.7	8.02	30.5	8.30	31.6	8.07	32.3	7.68
	46.0	20.3	5.78	23.7	6.24	23.7	6.24	23.7	6.24	24.4	5.98	25.3	5.78	26.3	5.63
	52.0	8.7	2.36	9.5	2.36	10.3	2.36	10.3	2.36	11.4	2.43	12.6	2.51	13.9	2.60

Combination :Indoor/outdoor capacity ratio	Outdoor air temp. °CDB	Indoor air temp. : °CWB													
		14.0		16.0		18.0		19.0		21.0		23.0		25.0	
		TC	PI	TC	PI	TC	PI	TC	PI	TC	PI	TC	PI	TC	PI
		kW	kW	kW	kW	kW	kW	kW	kW	kW	kW	kW	kW	kW	kW
100%	-10.0	18.7	2.05	22.4	2.45	26.1	2.86	28.0	3.07	31.7	3.48	35.5	3.89	39.2	4.30
	-5.0	18.7	2.05	22.4	2.46	26.1	2.87	28.0	3.07	31.7	3.48	35.5	3.89	39.2	4.30
	0.0	18.7	2.05	22.4	2.46	26.1	2.87	28.0	3.08	31.7	3.49	35.5	3.90	39.2	4.30
	5.0	18.7	2.06	22.4	2.47	26.1	2.88	28.0	3.08	31.7	3.49	35.5	3.90	39.2	4.31
	10.0	18.7	2.06	22.4	2.47	26.1	2.88	28.0	3.09	31.7	3.50	35.5	3.92	39.2	4.34
	15.0	18.7	2.07	22.4	2.48	26.1	2.91	28.0	3.12	31.7	3.56	35.5	4.00	39.2	4.42
	20.0	18.7	2.11	22.4	2.56	26.1	3.02	28.0	3.26	31.7	3.73	35.5	4.25	39.2	4.93
	25.0	18.7	2.40	22.4	2.98	26.1	3.60	28.0	3.94	31.7	4.65	35.5	5.42	39.2	6.25
	30.0	18.7	3.01	22.4	3.72	26.1	4.49	28.0	4.90	31.7	5.76	35.5	6.69	39.2	7.67
	35.0	18.7	3.67	22.4	4.53	26.1	5.45	28.0	5.93	31.7	6.96	35.5	8.05	37.4	8.30
	40.0	18.7	4.38	22.4	5.39	26.1	6.48	28.0	7.05	31.7	8.25	33.2	8.30	34.6	8.30
	43.0	18.7	4.83	22.4	5.94	26.1	7.14	28.0	7.76	30.3	8.30	31.4	8.14	32.1	7.72
	46.0	18.5	5.25	22.2	6.47	23.3	6.44	23.5	6.27	24.2	5.99	25.0	5.78	26.0	5.61
	52.0	8.0	2.21	8.7	2.24	9.6	2.29	10.1	2.32	11.1	2.38	12.2	2.45	13.5	2.53

* Use the above table when choosing the model of outdoor unit.
See “1-8. Calculation of Actual Capacity of Indoor Unit” under the section 2.

1. Capacity of Outdoor Unit

U-10MF3E8 (Cooling)

Capacity Ratio 30-130%

TC: Total capacity (kW), PI: Power input (kW)

Combination :Indoor/outdoor capacity ratio	Outdoor air temp. °CDB	Indoor air temp. : °CWB													
		14.0		16.0		18.0		19.0		21.0		23.0		25.0	
		TC	PI	TC	PI	TC	PI	TC	PI	TC	PI	TC	PI	TC	PI
		kW	kW	kW	kW	kW	kW	kW	kW	kW	kW	kW	kW	kW	kW
90%	-10.0	16.8	1.84	20.2	2.21	23.5	2.58	25.2	2.76	28.6	3.13	31.9	3.50	35.3	3.87
	-5.0	16.8	1.84	20.2	2.21	23.5	2.58	25.2	2.76	28.6	3.13	31.9	3.50	35.3	3.87
	0.0	16.8	1.85	20.2	2.22	23.5	2.58	25.2	2.77	28.6	3.14	31.9	3.51	35.3	3.88
	5.0	16.8	1.85	20.2	2.22	23.5	2.59	25.2	2.77	28.6	3.14	31.9	3.51	35.3	3.88
	10.0	16.8	1.86	20.2	2.23	23.5	2.60	25.2	2.78	28.6	3.15	31.9	3.52	35.3	3.90
	15.0	16.8	1.86	20.2	2.23	23.5	2.61	25.2	2.80	28.6	3.18	31.9	3.58	35.3	3.97
	20.0	16.8	1.89	20.2	2.29	23.5	2.69	25.2	2.90	28.6	3.32	31.9	3.74	35.3	4.17
	25.0	16.8	2.13	20.2	2.61	23.5	3.13	25.2	3.41	28.6	4.00	31.9	4.64	35.3	5.32
	30.0	16.8	2.67	20.2	3.27	23.5	3.92	25.2	4.26	28.6	4.98	31.9	5.75	35.3	6.56
	35.0	16.8	3.25	20.2	3.98	23.5	4.76	25.2	5.16	28.6	6.03	31.9	6.94	35.3	7.91
	40.0	16.8	3.88	20.2	4.75	23.5	5.67	25.2	6.16	28.6	7.16	31.9	8.23	33.3	8.30
	43.0	16.8	4.28	20.2	5.24	23.5	6.25	25.2	6.78	28.6	7.89	30.5	8.30	31.4	8.00
	46.0	16.6	4.65	20.0	5.69	23.3	6.80	23.2	6.46	23.6	6.10	24.2	5.81	24.9	5.57
	52.0	7.6	2.16	8.2	2.15	8.9	2.16	9.3	2.18	10.1	2.21	11.1	2.25	12.1	2.29

Combination :Indoor/outdoor capacity ratio	Outdoor air temp. °CDB	Indoor air temp. : °CWB													
		14.0		16.0		18.0		19.0		21.0		23.0		25.0	
		TC	PI	TC	PI	TC	PI	TC	PI	TC	PI	TC	PI	TC	PI
		kW	kW	kW	kW	kW	kW	kW	kW	kW	kW	kW	kW	kW	kW
80%	-10.0	14.9	1.64	17.9	1.96	20.9	2.29	22.4	2.46	25.4	2.78	28.4	3.11	31.4	3.44
	-5.0	14.9	1.64	17.9	1.97	20.9	2.29	22.4	2.46	25.4	2.79	28.4	3.11	31.4	3.44
	0.0	14.9	1.64	17.9	1.97	20.9	2.30	22.4	2.46	25.4	2.79	28.4	3.12	31.4	3.45
	5.0	14.9	1.64	17.9	1.97	20.9	2.30	22.4	2.47	25.4	2.79	28.4	3.12	31.4	3.45
	10.0	14.9	1.65	17.9	1.98	20.9	2.31	22.4	2.47	25.4	2.80	28.4	3.13	31.4	3.46
	15.0	14.9	1.66	17.9	1.99	20.9	2.32	22.4	2.48	25.4	2.82	28.4	3.16	31.4	3.51
	20.0	14.9	1.67	17.9	2.02	20.9	2.37	22.4	2.55	25.4	2.92	28.4	3.28	31.4	3.66
	25.0	14.9	1.84	17.9	2.27	20.9	2.69	22.4	2.92	25.4	3.40	28.4	3.92	31.4	4.47
	30.0	14.9	2.34	17.9	2.84	20.9	3.38	22.4	3.66	25.4	4.25	28.4	4.88	31.4	5.54
	35.0	14.9	2.85	17.9	3.47	20.9	4.12	22.4	4.45	25.4	5.17	28.4	5.92	31.4	6.70
	40.0	14.9	3.40	17.9	4.14	20.9	4.91	22.4	5.31	25.4	6.15	28.4	7.03	31.4	7.96
	43.0	14.9	3.75	17.9	4.56	20.9	5.42	22.4	5.86	25.4	6.78	28.4	7.75	30.5	8.30
	46.0	14.8	4.08	17.7	4.96	20.7	5.89	22.2	6.38	23.2	6.34	23.5	5.97	24.0	5.66
	52.0	7.3	2.12	7.8	2.08	8.3	2.06	8.6	2.06	9.2	2.06	10.0	2.07	10.8	2.09

Combination :Indoor/outdoor capacity ratio	Outdoor air temp. °CDB	Indoor air temp. : °CWB													
		14.0		16.0		18.0		19.0		21.0		23.0		25.0	
		TC	PI	TC	PI	TC	PI	TC	PI	TC	PI	TC	PI	TC	PI
		kW	kW	kW	kW	kW	kW	kW	kW	kW	kW	kW	kW	kW	kW
70%	-10.0	13.1	1.43	15.7	1.72	18.3	2.01	19.6	2.15	22.2	2.44	24.8	2.72	27.4	3.01
	-5.0	13.1	1.43	15.7	1.72	18.3	2.01	19.6	2.15	22.2	2.44	24.8	2.72	27.4	3.01
	0.0	13.1	1.44	15.7	1.72	18.3	2.01	19.6	2.15	22.2	2.44	24.8	2.73	27.4	3.02
	5.0	13.1	1.44	15.7	1.73	18.3	2.01	19.6	2.16	22.2	2.45	24.8	2.73	27.4	3.02
	10.0	13.1	1.44	15.7	1.73	18.3	2.02	19.6	2.16	22.2	2.45	24.8	2.74	27.4	3.03
	15.0	13.1	1.45	15.7	1.74	18.3	2.03	19.6	2.17	22.2	2.46	24.8	2.75	27.4	3.05
	20.0	13.1	1.46	15.7	1.75	18.3	2.06	19.6	2.21	22.2	2.52	24.8	2.84	27.4	3.16
	25.0	13.1	1.57	15.7	1.93	18.3	2.29	19.6	2.47	22.2	2.85	24.8	3.26	27.4	3.69
	30.0	13.1	2.03	15.7	2.44	18.3	2.88	19.6	3.11	22.2	3.58	24.8	4.09	27.4	4.61
	35.0	13.1	2.47	15.7	2.98	18.3	3.51	19.6	3.78	22.2	4.37	24.8	4.97	27.4	5.60
	40.0	13.1	2.95	15.7	3.56	18.3	4.19	19.6	4.52	22.2	5.21	24.8	5.92	27.4	6.67
	43.0	13.1	3.25	15.7	3.92	18.3	4.63	19.6	4.99	22.2	5.75	24.8	6.53	27.4	7.35
	46.0	12.9	3.53	15.5	4.27	18.1	5.04	19.4	5.43	22.0	6.25	23.1	6.31	23.4	5.91
	52.0	7.1	2.10	7.4	2.04	7.8	1.99	8.0	1.98	8.5	1.95	9.0	1.93	9.7	1.92

Combination :Indoor/outdoor capacity ratio	Outdoor air temp. °CDB	Indoor air temp. : °CWB													
		14.0		16.0		18.0		19.0		21.0		23.0		25.0	
		TC	PI	TC	PI	TC	PI	TC	PI	TC	PI	TC	PI	TC	PI
		kW	kW	kW	kW	kW	kW	kW	kW	kW	kW	kW	kW	kW	kW
60%	-10.0	11.2	1.23	13.4	1.47	15.7	1.72	16.8	1.84	19.0	2.09	21.3	2.33	23.5	2.58
	-5.0	11.2	1.23	13.4	1.48	15.7	1.72	16.8	1.84	19.0	2.09	21.3	2.34	23.5	2.58
	0.0	11.2	1.23	13.4	1.48	15.7	1.72	16.8	1.85	19.0	2.09	21.3	2.34	23.5	2.59
	5.0	11.2	1.23	13.4	1.48	15.7	1.73	16.8	1.85	19.0	2.10	21.3	2.34	23.5	2.59
	10.0	11.2	1.24	13.4	1.49	15.7	1.73	16.8	1.86	19.0	2.10	21.3	2.35	23.5	2.60
	15.0	11.2	1.24	13.4	1.49	15.7	1.74	16.8	1.86	19.0	2.11	21.3	2.36	23.5	2.61
	20.0	11.2	1.25	13.4	1.50	15.7	1.75	16.8	1.88	19.0	2.14	21.3	2.40	23.5	2.67
	25.0	11.2	1.32	13.4	1.61	15.7	1.91	16.8	2.05	19.0	2.37	21.3	2.67	23.5	3.00
	30.0	11.2	1.74	13.4	2.07	15.7	2.41	16.8	2.59	19.0	2.97	21.3	3.36	23.5	3.77
	35.0	11.2	2.11	13.4	2.52	15.7	2.95	16.8	3.16	19.0	3.62	21.3	4.10	23.5	4.59
	40.0	11.2	2.51	13.4	3.01	15.7	3.52	16.8	3.79	19.0	4.33	21.3	4.89	23.5	5.48
	43.0	11.2	2.77	13.4	3.32	15.7	3.89	16.8	4.18	19.0	4.78	21.3	5.40	23.5	6.05
	46.0	11.1	3.01	13.3	3.61	15.5	4.23	16.6	4.55	18.8	5.20	21.1	5.88	23.3	6.58
	52.0	6.9	2.12	7.1	2.03	7.4	1.96	7.5	1.92	7.9	1.87	8.3	1.83	8.7	1.79

* Use the above table when choosing the model of outdoor unit.
See “1-8. Calculation of Actual Capacity of Indoor Unit” under the section 2.

1. Capacity of Outdoor Unit

U-10MF3E8 (Cooling)

Capacity Ratio 30-130%

TC: Total capacity (kW), PI: Power input (kW)

Combination :Indoor/outdoor capacity ratio	Outdoor air temp. °CDB	Indoor air temp. : °CWB													
		14.0		16.0		18.0		19.0		21.0		23.0		25.0	
		TC	PI	TC	PI	TC	PI	TC	PI	TC	PI	TC	PI	TC	PI
		kW	kW	kW	kW	kW	kW	kW	kW	kW	kW	kW	kW	kW	kW
50%	-10.0	9.3	1.02	11.2	1.23	13.1	1.43	14.0	1.54	15.9	1.74	17.7	1.95	19.6	2.15
	-5.0	9.3	1.03	11.2	1.23	13.1	1.44	14.0	1.54	15.9	1.74	17.7	1.95	19.6	2.15
	0.0	9.3	1.03	11.2	1.23	13.1	1.44	14.0	1.54	15.9	1.75	17.7	1.95	19.6	2.16
	5.0	9.3	1.03	11.2	1.23	13.1	1.44	14.0	1.54	15.9	1.75	17.7	1.95	19.6	2.16
	10.0	9.3	1.03	11.2	1.24	13.1	1.44	14.0	1.55	15.9	1.75	17.7	1.96	19.6	2.16
	15.0	9.3	1.04	11.2	1.24	13.1	1.45	14.0	1.55	15.9	1.76	17.7	1.97	19.6	2.17
	20.0	9.3	1.05	11.2	1.25	13.1	1.46	14.0	1.56	15.9	1.77	17.7	1.98	19.6	2.20
	25.0	9.3	1.08	11.2	1.31	13.1	1.54	14.0	1.66	15.9	1.91	17.7	2.15	19.6	2.40
	30.0	9.3	1.46	11.2	1.72	13.1	1.98	14.0	2.12	15.9	2.40	17.7	2.70	19.6	3.00
	35.0	9.3	1.77	11.2	2.09	13.1	2.42	14.0	2.58	15.9	2.94	17.7	3.30	19.6	3.67
	40.0	9.3	2.10	11.2	2.49	13.1	2.89	14.0	3.10	15.9	3.52	17.7	3.95	19.6	4.39
	43.0	9.3	2.31	11.2	2.74	13.1	3.19	14.0	3.42	15.9	3.88	17.7	4.36	19.6	4.85
	46.0	9.2	2.51	11.1	2.98	12.9	3.47	13.9	3.72	15.7	4.23	17.6	4.75	19.4	5.28
	52.0	6.8	2.19	6.9	2.07	7.1	1.97	7.2	1.92	7.4	1.84	7.6	1.77	7.9	1.71

Combination :Indoor/outdoor capacity ratio	Outdoor air temp. °CDB	Indoor air temp. : °CWB													
		14.0		16.0		18.0		19.0		21.0		23.0		25.0	
		TC	PI	TC	PI	TC	PI	TC	PI	TC	PI	TC	PI	TC	PI
		kW	kW	kW	kW	kW	kW	kW	kW	kW	kW	kW	kW	kW	kW
40%	-10.0	7.5	0.82	9.0	0.98	10.5	1.15	11.2	1.23	12.7	1.39	14.2	1.56	15.7	1.72
	-5.0	7.5	0.82	9.0	0.99	10.5	1.15	11.2	1.23	12.7	1.39	14.2	1.56	15.7	1.72
	0.0	7.5	0.82	9.0	0.99	10.5	1.15	11.2	1.23	12.7	1.40	14.2	1.56	15.7	1.73
	5.0	7.5	0.82	9.0	0.99	10.5	1.15	11.2	1.23	12.7	1.40	14.2	1.56	15.7	1.73
	10.0	7.5	0.83	9.0	0.99	10.5	1.16	11.2	1.24	12.7	1.40	14.2	1.57	15.7	1.73
	15.0	7.5	0.83	9.0	1.00	10.5	1.16	11.2	1.24	12.7	1.41	14.2	1.57	15.7	1.74
	20.0	7.5	0.84	9.0	1.00	10.5	1.17	11.2	1.25	12.7	1.42	14.2	1.58	15.7	1.75
	25.0	7.5	0.85	9.0	1.02	10.5	1.20	11.2	1.29	12.7	1.48	14.2	1.66	15.7	1.85
	30.0	7.5	1.20	9.0	1.39	10.5	1.59	11.2	1.69	12.7	1.89	14.2	2.10	15.7	2.32
	35.0	7.5	1.45	9.0	1.69	10.5	1.93	11.2	2.05	12.7	2.31	14.2	2.57	15.7	2.84
	40.0	7.5	1.71	9.0	2.00	10.5	2.30	11.2	2.45	12.7	2.76	14.2	3.08	15.7	3.40
	43.0	7.5	1.87	9.0	2.20	10.5	2.53	11.2	2.70	12.7	3.05	14.2	3.40	15.7	3.76
	46.0	7.4	2.03	8.9	2.39	10.3	2.76	11.1	2.94	12.6	3.32	14.0	3.70	15.5	4.09
	52.0	6.0	2.02	6.8	2.18	6.9	2.05	6.9	1.99	7.0	1.88	7.1	1.78	7.3	1.70

Combination :Indoor/outdoor capacity ratio	Outdoor air temp. °CDB	Indoor air temp. : °CWB													
		14.0		16.0		18.0		19.0		21.0		23.0		25.0	
		TC	PI	TC	PI	TC	PI	TC	PI	TC	PI	TC	PI	TC	PI
		kW	kW	kW	kW	kW	kW	kW	kW	kW	kW	kW	kW	kW	kW
30%	-10.0	5.6	0.62	6.7	0.74	7.8	0.86	8.4	0.92	9.5	1.05	10.6	1.17	11.8	1.29
	-5.0	5.6	0.62	6.7	0.74	7.8	0.86	8.4	0.92	9.5	1.05	10.6	1.17	11.8	1.29
	0.0	5.6	0.62	6.7	0.74	7.8	0.86	8.4	0.93	9.5	1.05	10.6	1.17	11.8	1.29
	5.0	5.6	0.62	6.7	0.74	7.8	0.87	8.4	0.93	9.5	1.05	10.6	1.17	11.8	1.30
	10.0	5.6	0.62	6.7	0.74	7.8	0.87	8.4	0.93	9.5	1.05	10.6	1.18	11.8	1.30
	15.0	5.6	0.62	6.7	0.75	7.8	0.87	8.4	0.93	9.5	1.06	10.6	1.18	11.8	1.31
	20.0	5.6	0.63	6.7	0.75	7.8	0.88	8.4	0.94	9.5	1.07	10.6	1.19	11.8	1.31
	25.0	5.6	0.64	6.7	0.77	7.8	0.89	8.4	0.95	9.5	1.08	10.6	1.21	11.8	1.35
	30.0	5.6	0.96	6.7	1.09	7.8	1.23	8.4	1.30	9.5	1.43	10.6	1.57	11.8	1.71
	35.0	5.6	1.14	6.7	1.31	7.8	1.48	8.4	1.56	9.5	1.74	10.6	1.92	11.8	2.10
	40.0	5.6	1.34	6.7	1.54	7.8	1.75	8.4	1.86	9.5	2.07	10.6	2.29	11.8	2.50
	43.0	5.6	1.46	6.7	1.69	7.8	1.92	8.4	2.04	9.5	2.28	10.6	2.52	11.8	2.76
	46.0	5.5	1.57	6.7	1.83	7.8	2.09	8.3	2.22	9.4	2.48	10.5	2.74	11.6	3.01
	52.0	4.5	1.57	5.4	1.83	6.4	2.08	6.8	2.21	6.8	2.06	6.9	1.93	6.9	1.81

* Use the above table when choosing the model of outdoor unit.
See “1-8. Calculation of Actual Capacity of Indoor Unit” under the section 2.

1. Capacity of Outdoor Unit

1-4. U-10MF3E8 (Heating)

Capacity Ratio 30-130%

TC: Total capacity (kW), PI: Power input (kW)

Combination :Indoor/outdoor capacity ratio	Outdoor air temp.		Indoor air temp. : °CDB													
			16.0		17.0		19.0		20.0		23.0		25.0		30.0	
			TC	PI	TC	PI	TC	PI	TC	PI	TC	PI	TC	PI	TC	PI
	°CDB	°CWB	kW	kW	kW	kW	kW	kW	kW	kW	kW	kW	kW	kW	kW	kW
130%	-19.8	-20.0	23.3	8.21	22.7	8.07	21.6	7.77	21.0	7.61	19.1	7.10	17.9	6.72	14.5	5.64
	-14.7	-15.0	25.0	8.42	24.4	8.27	23.2	7.96	22.6	7.79	20.6	7.26	19.2	6.87	15.6	5.75
	-9.6	-10.0	26.6	8.53	26.3	8.52	25.0	8.19	24.3	8.01	22.2	7.45	20.8	7.05	16.9	5.89
	-4.4	-5.0	29.0	8.53	28.7	8.53	28.1	8.52	27.8	8.53	25.5	7.91	23.9	7.46	19.4	6.19
	-1.8	-2.5	31.0	8.53	30.6	8.53	29.8	8.53	29.4	8.52	27.9	8.27	26.1	7.78	21.2	6.42
	0.8	0.0	33.5	8.53	33.0	8.53	32.1	8.53	31.7	8.53	30.1	8.38	27.6	7.64	21.3	5.86
	2.8	2.0	35.3	8.53	34.8	8.53	33.9	8.53	33.4	8.53	30.1	7.69	27.6	7.02	21.3	5.41
	6.0	5.0	38.3	8.53	37.6	8.46	35.1	7.85	33.9	7.55	30.1	6.68	27.6	6.12	21.3	4.76
	7.0	6.0	38.9	8.31	37.6	8.02	35.1	7.45	33.9	7.17	30.1	6.36	27.6	5.83	21.3	4.55
	8.6	7.5	38.9	7.63	37.6	7.37	35.1	6.87	33.9	6.62	30.1	5.89	27.6	5.41	21.3	4.24
	11.2	10.0	38.9	6.57	37.6	6.36	35.1	5.95	33.9	5.74	30.1	5.14	27.6	4.74	21.3	3.76
	16.4	15.0	38.9	4.91	37.6	4.77	35.1	4.47	33.9	4.33	30.1	3.89	27.6	3.60	21.3	2.91
	24.0	18.0	38.9	4.91	37.6	4.77	35.1	4.47	33.9	4.33	30.1	3.89	27.6	3.60	21.3	2.86

Combination :Indoor/outdoor capacity ratio	Outdoor air temp.		Indoor air temp. : °CDB													
			16.0		17.0		19.0		20.0		23.0		25.0		30.0	
			TC	PI	TC	PI	TC	PI	TC	PI	TC	PI	TC	PI	TC	PI
	°CDB	°CWB	kW	kW	kW	kW	kW	kW	kW	kW	kW	kW	kW	kW	kW	kW
120%	-19.8	-20.0	23.3	8.12	22.7	7.97	21.5	7.68	20.9	7.53	19.1	7.02	17.8	6.64	14.4	5.58
	-14.7	-15.0	25.0	8.32	24.4	8.18	23.1	7.87	22.5	7.71	20.5	7.18	19.2	6.79	15.6	5.69
	-9.6	-10.0	26.7	8.53	26.2	8.43	24.9	8.10	24.2	7.93	22.1	7.38	20.7	6.97	16.8	5.83
	-4.4	-5.0	29.1	8.53	28.8	8.53	28.3	8.53	27.8	8.45	25.4	7.84	23.8	7.39	19.4	6.13
	-1.8	-2.5	31.3	8.52	30.8	8.53	30.0	8.53	29.6	8.53	27.8	8.20	26.0	7.72	20.8	6.25
	0.8	0.0	33.7	8.52	33.3	8.52	32.4	8.53	31.9	8.53	29.4	7.99	27.0	7.30	20.8	5.63
	2.8	2.0	35.6	8.53	35.1	8.52	34.1	8.53	33.1	8.28	29.4	7.32	27.0	6.70	20.8	5.20
	6.0	5.0	38.0	8.26	36.8	7.98	34.3	7.43	33.1	7.16	29.4	6.36	27.0	5.84	20.8	4.57
	7.0	6.0	38.0	7.82	36.8	7.56	34.3	7.05	33.1	6.80	29.4	6.05	27.0	5.57	20.8	4.37
	8.6	7.5	38.0	7.18	36.8	6.95	34.3	6.49	33.1	6.27	29.4	5.60	27.0	5.16	20.8	4.08
	11.2	10.0	38.0	6.18	36.8	5.99	34.3	5.62	33.1	5.43	29.4	4.89	27.0	4.52	20.8	3.62
	16.4	15.0	38.0	4.81	36.8	4.67	34.3	4.38	33.1	4.24	29.4	3.81	27.0	3.52	20.8	2.80
	24.0	18.0	38.0	4.81	36.8	4.67	34.3	4.38	33.1	4.24	29.4	3.81	27.0	3.52	20.8	2.80

Combination :Indoor/outdoor capacity ratio	Outdoor air temp.		Indoor air temp. : °CDB													
			16.0		17.0		19.0		20.0		23.0		25.0		30.0	
			TC	PI	TC	PI	TC	PI	TC	PI	TC	PI	TC	PI	TC	PI
	°CDB	°CWB	kW	kW	kW	kW	kW	kW	kW	kW	kW	kW	kW	kW	kW	kW
110%	-19.8	-20.0	23.2	8.02	22.6	7.88	21.5	7.59	20.9	7.44	19.0	6.94	17.7	6.57	14.3	5.52
	-14.7	-15.0	24.9	8.23	24.3	8.09	23.1	7.79	22.5	7.63	20.5	7.10	19.1	6.72	15.5	5.63
	-9.6	-10.0	26.8	8.49	26.2	8.34	24.9	8.02	24.2	7.85	22.1	7.30	20.6	6.90	16.8	5.77
	-4.4	-5.0	29.3	8.53	29.0	8.53	28.5	8.51	27.7	8.37	25.4	7.76	23.7	7.32	19.3	6.08
	-1.8	-2.5	31.5	8.53	31.1	8.53	30.2	8.53	29.8	8.52	27.7	8.12	25.9	7.64	20.3	6.04
	0.8	0.0	34.0	8.53	33.5	8.53	32.6	8.53	32.1	8.53	28.7	7.61	26.3	6.97	20.3	5.41
	2.8	2.0	35.8	8.53	35.3	8.52	33.5	8.15	32.3	7.86	28.7	6.98	26.3	6.40	20.3	5.00
	6.0	5.0	37.1	7.78	35.9	7.53	33.5	7.03	32.3	6.78	28.7	6.05	26.3	5.58	20.3	4.40
	7.0	6.0	37.1	7.36	35.9	7.13	33.5	6.67	32.3	6.44	28.7	5.76	26.3	5.31	20.3	4.20
	8.6	7.5	37.1	6.76	35.9	6.55	33.5	6.14	32.3	5.93	28.7	5.33	26.3	4.92	20.3	3.92
	11.2	10.0	37.1	5.80	35.9	5.64	33.5	5.30	32.3	5.14	28.7	4.64	26.3	4.31	20.3	3.48
	16.4	15.0	37.1	4.70	35.9	4.56	33.5	4.28	32.3	4.14	28.7	3.72	26.3	3.45	20.3	2.75
	24.0	18.0	37.1	4.70	35.9	4.56	33.5	4.28	32.3	4.14	28.7	3.72	26.3	3.45	20.3	2.75

Combination :Indoor/outdoor capacity ratio	Outdoor air temp.		Indoor air temp. : °CDB													
			16.0		17.0		19.0		20.0		23.0		25.0		30.0	
			TC	PI	TC	PI	TC	PI	TC	PI	TC	PI	TC	PI	TC	PI
	°CDB	°CWB	kW	kW	kW	kW	kW	kW	kW	kW	kW	kW	kW	kW	kW	kW
100%	-19.8	-20.0	23.2	7.93	22.6	7.79	21.4	7.51	20.8	7.36	18.9	6.86	17.7	6.49	14.3	5.46
	-14.7	-15.0	24.9	8.15	24.3	8.00	23.0	7.70	22.4	7.54	20.4	7.02	19.1	6.65	15.4	5.57
	-9.6	-10.0	26.8	8.41	26.1	8.26	24.8	7.94	24.1	7.77	22.0	7.23	20.6	6.83	16.7	5.71
	-4.4	-5.0	29.5	8.53	29.1	8.53	28.5	8.49	27.7	8.28	25.3	7.69	23.7	7.25	19.2	6.01
	-1.8	-2.5	31.7	8.52	31.3	8.53	30.4	8.53	30.0	8.53	27.7	8.03	25.7	7.48	19.8	5.81
	0.8	0.0	34.2	8.53	33.8	8.53	32.7	8.46	31.5	8.15	28.0	7.25	25.7	6.66	19.8	5.20
	2.8	2.0	36.1	8.53	35.0	8.27	32.7	7.72	31.5	7.45	28.0	6.64	25.7	6.11	19.8	4.80
	6.0	5.0	36.2	7.32	35.0	7.09	32.7	6.65	31.5	6.42	28.0	5.75	25.7	5.31	19.8	4.22
	7.0	6.0	36.2	6.92	35.0	6.72	32.7	6.30	31.5	6.09	28.0	5.47	25.7	5.06	19.8	4.03
	8.6	7.5	36.2	6.35	35.0	6.16	32.7	5.79	31.5	5.61	28.0	5.05	25.7	4.69	19.8	3.76
	11.2	10.0	36.2	5.43	35.0	5.28	32.7	4.99	31.5	4.85	28.0	4.41	25.7	4.11	19.8	3.34
	16.4	15.0	36.2	4.60	35.0	4.46	32.7	4.19	31.5	4.05	28.0	3.64	25.7	3.37	19.8	2.69
	24.0	18.0	36.2	4.60	35.0	4.46	32.7	4.19	31.5	4.05	28.0	3.64	25.7	3.37	19.8	2.69

* Use the above table when choosing the model of outdoor unit.
See “1-8. Calculation of Actual Capacity of Indoor Unit” under the section 2.

1. Capacity of Outdoor Unit

U-10MF3E8 (Heating)

Capacity Ratio 30-130%

TC: Total capacity (kW), PI: Power input (kW)

Combination :Indoor/outdoor capacity ratio	Outdoor air temp.		Indoor air temp. : °CDB													
			16.0		17.0		19.0		20.0		23.0		25.0		30.0	
			TC	PI	TC	PI	TC	PI	TC	PI	TC	PI	TC	PI	TC	PI
	°CDB	°CWB	kW	kW	kW	kW	kW	kW	kW	kW	kW	kW	kW	kW	kW	kW
90%	-19.8	-20.0	22.9	7.57	22.4	7.45	21.2	7.17	20.6	7.03	18.7	6.55	17.4	6.21	14.0	5.22
	-14.7	-15.0	24.7	7.80	24.1	7.67	22.8	7.38	22.2	7.22	20.2	6.73	18.8	6.36	15.1	5.34
	-9.6	-10.0	26.6	8.08	26.0	7.94	24.6	7.63	23.9	7.46	21.8	6.94	20.3	6.56	16.4	5.48
	-4.4	-5.0	30.3	8.53	29.8	8.49	28.3	8.18	27.5	8.01	25.1	7.43	23.1	6.90	17.9	5.44
	-1.8	-2.5	32.6	8.47	31.5	8.22	29.4	7.72	28.4	7.47	25.2	6.73	23.1	6.22	17.9	4.95
	0.8	0.0	32.6	7.40	31.5	7.20	29.4	6.78	28.4	6.58	25.2	5.94	23.1	5.52	17.9	4.43
	2.8	2.0	32.6	6.71	31.5	6.53	29.4	6.17	28.4	5.99	25.2	5.42	23.1	5.08	17.9	4.14
	6.0	5.0	32.6	5.77	31.5	5.65	29.4	5.40	28.4	5.27	25.2	4.85	23.1	4.52	17.9	3.66
	7.0	6.0	32.6	5.65	31.5	5.51	29.4	5.21	28.4	5.06	25.2	4.61	23.1	4.30	17.9	3.50
	8.6	7.5	32.6	5.16	31.5	5.04	29.4	4.78	28.4	4.65	25.2	4.25	23.1	3.98	17.9	3.26
	11.2	10.0	32.6	4.39	31.5	4.30	29.4	4.10	28.4	4.01	25.2	3.70	23.1	3.48	17.9	2.90
	16.4	15.0	32.6	4.17	31.5	4.05	29.4	3.81	28.4	3.68	25.2	3.32	23.1	3.07	17.9	2.46
	24.0	18.0	32.6	4.17	31.5	4.05	29.4	3.81	28.4	3.68	25.2	3.32	23.1	3.07	17.9	2.46

Combination :Indoor/outdoor capacity ratio	Outdoor air temp.		Indoor air temp. : °CDB													
			16.0		17.0		19.0		20.0		23.0		25.0		30.0	
			TC	PI	TC	PI	TC	PI	TC	PI	TC	PI	TC	PI	TC	PI
	°CDB	°CWB	kW	kW	kW	kW	kW	kW	kW	kW	kW	kW	kW	kW	kW	kW
80%	-19.8	-20.0	22.8	7.27	22.2	7.15	20.9	6.88	20.3	6.74	18.4	6.29	17.1	5.96	13.7	5.01
	-14.7	-15.0	24.6	7.51	23.9	7.38	22.6	7.10	22.0	6.95	19.9	6.47	18.5	6.12	14.8	5.13
	-9.6	-10.0	26.5	7.83	25.8	7.68	24.4	7.35	23.7	7.19	21.5	6.69	20.0	6.31	15.9	5.20
	-4.4	-5.0	28.9	7.55	28.0	7.36	26.1	6.97	25.2	6.77	22.4	6.16	20.5	5.74	15.9	4.65
	-1.8	-2.5	28.9	6.65	28.0	6.49	26.1	6.17	25.2	6.00	22.4	5.49	20.5	5.13	15.9	4.20
	0.8	0.0	28.9	5.78	28.0	5.64	26.1	5.41	25.2	5.29	22.4	4.89	20.5	4.60	15.9	3.81
	2.8	2.0	28.9	5.30	28.0	5.20	26.1	5.00	25.2	4.89	22.4	4.53	20.5	4.27	15.9	3.55
	6.0	5.0	28.9	4.66	28.0	4.59	26.1	4.42	25.2	4.33	22.4	4.03	20.5	3.80	15.9	3.14
	7.0	6.0	28.9	4.54	28.0	4.45	26.1	4.25	25.2	4.15	22.4	3.83	20.5	3.61	15.9	3.00
	8.6	7.5	28.9	4.13	28.0	4.05	26.1	3.89	25.2	3.80	22.4	3.53	20.5	3.34	15.9	2.81
	11.2	10.0	28.9	3.75	28.0	3.64	26.1	3.42	25.2	3.32	22.4	3.07	20.5	2.92	15.9	2.49
	16.4	15.0	28.9	3.75	28.0	3.64	26.1	3.42	25.2	3.32	22.4	2.99	20.5	2.77	15.9	2.23
	24.0	18.0	28.9	3.75	28.0	3.64	26.1	3.42	25.2	3.32	22.4	2.99	20.5	2.77	15.9	2.23

Combination :Indoor/outdoor capacity ratio	Outdoor air temp.		Indoor air temp. : °CDB													
			16.0		17.0		19.0		20.0		23.0		25.0		30.0	
			TC	PI	TC	PI	TC	PI	TC	PI	TC	PI	TC	PI	TC	PI
	°CDB	°CWB	kW	kW	kW	kW	kW	kW	kW	kW	kW	kW	kW	kW	kW	kW
70%	-19.8	-20.0	22.7	7.06	22.1	6.94	20.9	6.68	20.2	6.54	18.3	6.10	17.0	5.77	13.5	4.86
	-14.7	-15.0	24.6	7.34	23.9	7.19	22.6	6.90	21.9	6.76	19.6	6.20	18.0	5.78	13.9	4.68
	-9.6	-10.0	25.3	7.07	24.5	6.91	22.9	6.58	22.1	6.41	19.6	5.86	18.0	5.47	13.9	4.41
	-4.4	-5.0	25.3	5.89	24.5	5.78	22.9	5.53	22.1	5.40	19.6	5.00	18.0	4.72	13.9	3.93
	-1.8	-2.5	25.3	5.22	24.5	5.13	22.9	4.95	22.1	4.85	19.6	4.52	18.0	4.28	13.9	3.57
	0.8	0.0	25.3	4.63	24.5	4.57	22.9	4.41	22.1	4.33	19.6	4.05	18.0	3.84	13.9	3.23
	2.8	2.0	25.3	4.25	24.5	4.19	22.9	4.06	22.1	3.99	19.6	3.75	18.0	3.56	13.9	3.01
	6.0	5.0	25.3	3.71	24.5	3.67	22.9	3.57	22.1	3.51	19.6	3.31	18.0	3.15	13.9	2.67
	7.0	6.0	25.3	3.58	24.5	3.52	22.9	3.41	22.1	3.35	19.6	3.15	18.0	2.99	13.9	2.55
	8.6	7.5	25.3	3.33	24.5	3.23	22.9	3.11	22.1	3.06	19.6	2.90	18.0	2.77	13.9	2.38
	11.2	10.0	25.3	3.33	24.5	3.23	22.9	3.04	22.1	2.95	19.6	2.66	18.0	2.47	13.9	2.12
	16.4	15.0	25.3	3.33	24.5	3.23	22.9	3.04	22.1	2.95	19.6	2.66	18.0	2.47	13.9	1.99
	24.0	18.0	25.3	3.33	24.5	3.23	22.9	3.04	22.1	2.95	19.6	2.66	18.0	2.47	13.9	1.99

Combination :Indoor/outdoor capacity ratio	Outdoor air temp.		Indoor air temp. : °CDB													
			16.0		17.0		19.0		20.0		23.0		25.0		30.0	
			TC	PI	TC	PI	TC	PI	TC	PI	TC	PI	TC	PI	TC	PI
	°CDB	°CWB	kW	kW	kW	kW	kW	kW	kW	kW	kW	kW	kW	kW	kW	kW
60%	-19.8	-20.0	21.7	6.53	21.0	6.36	19.6	6.05	18.9	5.89	16.8	5.40	15.4	5.06	11.9	4.16
	-14.7	-15.0	21.7	6.03	21.0	5.92	19.6	5.68	18.9	5.55	16.8	5.11	15.4	4.77	11.9	3.92
	-9.6	-10.0	21.7	5.49	21.0	5.39	19.6	5.20	18.9	5.09	16.8	4.76	15.4	4.50	11.9	3.74
	-4.4	-5.0	21.7	4.68	21.0	4.62	19.6	4.47	18.9	4.39	16.8	4.12	15.4	3.91	11.9	3.30
	-1.8	-2.5	21.7	4.17	21.0	4.12	19.6	4.00	18.9	3.94	16.8	3.71	15.4	3.53	11.9	3.00
	0.8	0.0	21.7	3.68	21.0	3.64	19.6	3.55	18.9	3.50	16.8	3.31	15.4	3.16	11.9	2.71
	2.8	2.0	21.7	3.36	21.0	3.33	19.6	3.26	18.9	3.21	16.8	3.05	15.4	2.92	11.9	2.52
	6.0	5.0	21.7	2.91	21.0	2.89	19.6	2.84	18.9	2.80	16.8	2.68	15.4	2.57	11.9	2.22
	7.0	6.0	21.7	2.91	21.0	2.83	19.6	2.69	18.9	2.65	16.8	2.54	15.4	2.44	11.9	2.14
	8.6	7.5	21.7	2.91	21.0	2.83	19.6	2.66	18.9	2.58	16.8	2.34	15.4	2.26	11.9	2.00
	11.2	10.0	21.7	2.91	21.0	2.83	19.6	2.66	18.9	2.58	16.8	2.33	15.4	2.17	11.9	1.78
	16.4	15.0	21.7	2.91	21.0	2.83	19.6	2.66	18.9	2.58	16.8	2.33	15.4	2.17	11.9	1.76
	24.0	18.0	21.7	2.91	21.0	2.83	19.6	2.66	18.9	2.58	16.8	2.33	15.4	2.17	11.9	1.76

* Use the above table when choosing the model of outdoor unit.
See “1-8. Calculation of Actual Capacity of Indoor Unit” under the section 2.

1. Capacity of Outdoor Unit

U-10MF3E8 (Heating)

Capacity Ratio 30-130%

TC: Total capacity (kW), PI: Power input (kW)

Combination :Indoor/outdoor capacity ratio	Outdoor air temp.		Indoor air temp. : °CDB													
			16.0		17.0		19.0		20.0		23.0		25.0		30.0	
			TC	PI	TC	PI	TC	PI	TC	PI	TC	PI	TC	PI	TC	PI
	°CDB	°CWB	kW	kW	kW	kW	kW	kW	kW	kW	kW	kW	kW	kW	kW	kW
50%	-19.8	-20.0	18.1	5.10	17.5	5.02	16.3	4.85	15.8	4.75	14.0	4.37	12.8	4.12	9.9	3.43
	-14.7	-15.0	18.1	4.72	17.5	4.65	16.3	4.51	15.8	4.43	14.0	4.15	12.8	3.94	9.9	3.26
	-9.6	-10.0	18.1	4.35	17.5	4.29	16.3	4.17	15.8	4.10	14.0	3.86	12.8	3.67	9.9	3.12
	-4.4	-5.0	18.1	3.69	17.5	3.65	16.3	3.56	15.8	3.51	14.0	3.32	12.8	3.18	9.9	2.73
	-1.8	-2.5	18.1	3.27	17.5	3.25	16.3	3.18	15.8	3.13	14.0	2.98	12.8	2.86	9.9	2.48
	0.8	0.0	18.1	2.87	17.5	2.85	16.3	2.80	15.8	2.77	14.0	2.66	12.8	2.56	9.9	2.24
	2.8	2.0	18.1	2.61	17.5	2.60	16.3	2.57	15.8	2.54	14.0	2.45	12.8	2.37	9.9	2.08
	6.0	5.0	18.1	2.48	17.5	2.42	16.3	2.28	15.8	2.21	14.0	2.12	12.8	2.05	9.9	1.82
	7.0	6.0	18.1	2.48	17.5	2.42	16.3	2.28	15.8	2.21	14.0	2.01	12.8	1.95	9.9	1.76
	8.6	7.5	18.1	2.48	17.5	2.42	16.3	2.28	15.8	2.21	14.0	2.01	12.8	1.87	9.9	1.65
	11.2	10.0	18.1	2.48	17.5	2.42	16.3	2.28	15.8	2.21	14.0	2.01	12.8	1.87	9.9	1.53
	16.4	15.0	18.1	2.48	17.5	2.42	16.3	2.28	15.8	2.21	14.0	2.01	12.8	1.87	9.9	1.53
	24.0	18.0	18.1	2.48	17.5	2.42	16.3	2.28	15.8	2.21	14.0	2.01	12.8	1.87	9.9	1.53

Combination :Indoor/outdoor capacity ratio	Outdoor air temp.		Indoor air temp. : °CDB													
			16.0		17.0		19.0		20.0		23.0		25.0		30.0	
			TC	PI	TC	PI	TC	PI	TC	PI	TC	PI	TC	PI	TC	PI
	°CDB	°CWB	kW	kW	kW	kW	kW	kW	kW	kW	kW	kW	kW	kW	kW	kW
40%	-19.8	-20.0	14.5	3.95	14.0	3.90	13.1	3.79	12.6	3.73	11.2	3.50	10.3	3.30	7.9	2.77
	-14.7	-15.0	14.5	3.65	14.0	3.61	13.1	3.51	12.6	3.46	11.2	3.27	10.3	3.13	7.9	2.64
	-9.6	-10.0	14.5	3.35	14.0	3.32	13.1	3.24	12.6	3.20	11.2	3.04	10.3	2.91	7.9	2.51
	-4.4	-5.0	14.5	2.83	14.0	2.81	13.1	2.76	12.6	2.73	11.2	2.61	10.3	2.51	7.9	2.19
	-1.8	-2.5	14.5	2.50	14.0	2.49	13.1	2.46	12.6	2.43	11.2	2.34	10.3	2.26	7.9	2.00
	0.8	0.0	14.5	2.19	14.0	2.18	13.1	2.16	12.6	2.15	11.2	2.09	10.3	2.02	7.9	1.80
	2.8	2.0	14.5	2.06	14.0	2.01	13.1	1.96	12.6	1.95	11.2	1.90	10.3	1.85	7.9	1.66
	6.0	5.0	14.5	2.06	14.0	2.01	13.1	1.90	12.6	1.84	11.2	1.68	10.3	1.60	7.9	1.47
	7.0	6.0	14.5	2.06	14.0	2.01	13.1	1.90	12.6	1.84	11.2	1.68	10.3	1.57	7.9	1.41
	8.6	7.5	14.5	2.06	14.0	2.01	13.1	1.90	12.6	1.84	11.2	1.68	10.3	1.57	7.9	1.33
	11.2	10.0	14.5	2.06	14.0	2.01	13.1	1.90	12.6	1.84	11.2	1.68	10.3	1.57	7.9	1.30
	16.4	15.0	14.5	2.06	14.0	2.01	13.1	1.90	12.6	1.84	11.2	1.68	10.3	1.57	7.9	1.30
	24.0	18.0	14.5	2.06	14.0	2.01	13.1	1.90	12.6	1.84	11.2	1.68	10.3	1.57	7.9	1.30

Combination :Indoor/outdoor capacity ratio	Outdoor air temp.		Indoor air temp. : °CDB													
			16.0		17.0		19.0		20.0		23.0		25.0		30.0	
			TC	PI	TC	PI	TC	PI	TC	PI	TC	PI	TC	PI	TC	PI
	°CDB	°CWB	kW	kW	kW	kW	kW	kW	kW	kW	kW	kW	kW	kW	kW	kW
30%	-19.8	-20.0	10.9	2.91	10.5	2.88	9.8	2.82	9.5	2.78	8.4	2.64	7.7	2.52	6.0	2.14
	-14.7	-15.0	10.9	2.69	10.5	2.66	9.8	2.61	9.5	2.58	8.4	2.46	7.7	2.36	6.0	2.05
	-9.6	-10.0	10.9	2.47	10.5	2.45	9.8	2.41	9.5	2.38	8.4	2.28	7.7	2.20	6.0	1.93
	-4.4	-5.0	10.9	2.08	10.5	2.07	9.8	2.05	9.5	2.03	8.4	1.96	7.7	1.90	6.0	1.69
	-1.8	-2.5	10.9	1.82	10.5	1.82	9.8	1.81	9.5	1.80	8.4	1.75	7.7	1.70	6.0	1.53
	0.8	0.0	10.9	1.64	10.5	1.60	9.8	1.57	9.5	1.57	8.4	1.54	7.7	1.51	6.0	1.38
	2.8	2.0	10.9	1.64	10.5	1.60	9.8	1.52	9.5	1.48	8.4	1.41	7.7	1.39	6.0	1.29
	6.0	5.0	10.9	1.64	10.5	1.60	9.8	1.52	9.5	1.48	8.4	1.35	7.7	1.27	6.0	1.15
	7.0	6.0	10.9	1.64	10.5	1.60	9.8	1.52	9.5	1.48	8.4	1.35	7.7	1.27	6.0	1.11
	8.6	7.5	10.9	1.64	10.5	1.60	9.8	1.52	9.5	1.48	8.4	1.35	7.7	1.27	6.0	1.07
	11.2	10.0	10.9	1.64	10.5	1.60	9.8	1.52	9.5	1.48	8.4	1.35	7.7	1.27	6.0	1.07
	16.4	15.0	10.9	1.64	10.5	1.60	9.8	1.52	9.5	1.48	8.4	1.35	7.7	1.27	6.0	1.07
	24.0	18.0	10.9	1.64	10.5	1.60	9.8	1.52	9.5	1.48	8.4	1.35	7.7	1.27	6.0	1.07

* Use the above table when choosing the model of outdoor unit.
See “1-8. Calculation of Actual Capacity of Indoor Unit” under the section 2.

1. Capacity of Outdoor Unit

1-5. U-12MF3E8 (Cooling)

Capacity Ratio 30-130%

TC: Total capacity (kW), PI: Power input (kW)

Combination :Indoor/outdoor capacity ratio	Outdoor air temp. °CDB	Indoor air temp. : °CWB													
		14.0		16.0		18.0		19.0		21.0		23.0		25.0	
		TC	PI	TC	PI	TC	PI	TC	PI	TC	PI	TC	PI	TC	PI
		kW	kW	kW	kW	kW	kW	kW	kW	kW	kW	kW	kW	kW	kW
130%	-10.0	29.0	3.78	34.8	4.54	36.0	4.70	36.0	4.70	40.8	5.33	45.6	5.95	50.4	6.58
	-5.0	29.0	3.79	34.8	4.54	36.0	4.70	36.0	4.70	40.8	5.33	45.6	5.96	50.4	6.58
	0.0	29.0	3.79	34.8	4.55	36.0	4.71	36.0	4.71	40.8	5.34	45.6	5.96	50.4	6.59
	5.0	29.0	3.80	34.8	4.56	36.0	4.72	36.0	4.72	40.8	5.35	45.6	5.99	50.4	6.62
	10.0	29.0	3.81	34.8	4.57	36.0	4.75	36.0	4.75	40.8	5.40	45.6	6.05	50.4	6.69
	15.0	29.0	3.83	34.8	4.62	36.0	4.85	36.0	4.85	40.8	5.54	45.6	6.21	50.4	6.85
	20.0	29.0	3.95	34.8	4.81	36.0	5.14	36.0	5.14	40.8	5.89	45.6	6.92	50.4	8.04
	25.0	29.0	4.54	34.8	5.65	36.0	6.34	36.0	6.34	40.8	7.50	45.6	8.75	50.4	10.11
	30.0	29.0	5.68	34.8	7.05	36.0	7.83	36.0	7.83	40.8	9.22	45.6	10.72	49.9	12.00
	35.0	29.0	6.91	34.8	8.56	36.0	9.44	36.0	9.44	40.8	11.08	44.2	12.00	46.0	12.00
	40.0	29.0	8.24	34.8	10.18	36.0	11.17	36.0	11.17	39.0	12.00	40.7	12.00	42.5	12.00
	43.0	29.0	9.08	34.8	11.22	35.5	11.99	35.5	11.99	37.2	12.00	38.2	11.48	39.2	10.99
	46.0	28.6	8.96	28.6	8.96	28.6	8.96	28.6	8.96	29.6	8.64	30.9	8.40	32.3	8.23
	52.0	12.0	3.59	12.8	3.59	12.8	3.59	12.8	3.59	14.2	3.72	15.8	3.86	17.5	4.01

Combination :Indoor/outdoor capacity ratio	Outdoor air temp. °CDB	Indoor air temp. : °CWB													
		14.0		16.0		18.0		19.0		21.0		23.0		25.0	
		TC	PI	TC	PI	TC	PI	TC	PI	TC	PI	TC	PI	TC	PI
		kW	kW	kW	kW	kW	kW	kW	kW	kW	kW	kW	kW	kW	kW
120%	-10.0	26.8	3.49	32.2	4.19	35.2	4.59	35.2	4.59	39.9	5.20	44.6	5.82	49.2	6.43
	-5.0	26.8	3.50	32.2	4.20	35.2	4.60	35.2	4.60	39.9	5.21	44.6	5.82	49.2	6.43
	0.0	26.8	3.50	32.2	4.20	35.2	4.60	35.2	4.60	39.9	5.21	44.6	5.83	49.2	6.44
	5.0	26.8	3.51	32.2	4.21	35.2	4.61	35.2	4.61	39.9	5.23	44.6	5.85	49.2	6.47
	10.0	26.8	3.52	32.2	4.22	35.2	4.64	35.2	4.64	39.9	5.27	44.6	5.91	49.2	6.53
	15.0	26.8	3.53	32.2	4.26	35.2	4.73	35.2	4.73	39.9	5.40	44.6	6.07	49.2	6.70
	20.0	26.8	3.65	32.2	4.44	35.2	5.00	35.2	5.00	39.9	5.73	44.6	6.67	49.2	7.74
	25.0	26.8	4.20	32.2	5.21	35.2	6.13	35.2	6.13	39.9	7.24	44.6	8.45	49.2	9.74
	30.0	26.8	5.25	32.2	6.50	35.2	7.58	35.2	7.58	39.9	8.92	44.6	10.36	49.2	11.89
	35.0	26.8	6.38	32.2	7.89	35.2	9.14	35.2	9.14	39.9	10.73	43.8	12.00	45.7	12.00
	40.0	26.8	7.60	32.2	9.38	35.2	10.83	35.2	10.83	38.7	12.00	40.4	12.00	42.2	12.00
	43.0	26.8	8.38	32.2	10.33	35.2	11.91	35.2	11.91	36.9	12.00	38.0	11.55	38.9	11.02
	46.0	26.5	8.99	28.4	8.99	28.4	8.99	28.4	8.99	29.4	8.64	30.5	8.38	31.9	8.18
	52.0	11.2	3.53	12.3	3.53	12.5	3.53	12.5	3.53	13.9	3.65	15.4	3.78	17.1	3.91

Combination :Indoor/outdoor capacity ratio	Outdoor air temp. °CDB	Indoor air temp. : °CWB													
		14.0		16.0		18.0		19.0		21.0		23.0		25.0	
		TC	PI	TC	PI	TC	PI	TC	PI	TC	PI	TC	PI	TC	PI
		kW	kW	kW	kW	kW	kW	kW	kW	kW	kW	kW	kW	kW	kW
110%	-10.0	24.6	3.20	29.5	3.85	34.3	4.48	34.3	4.48	38.9	5.08	43.5	5.68	48.1	6.27
	-5.0	24.6	3.21	29.5	3.85	34.3	4.49	34.3	4.49	38.9	5.08	43.5	5.68	48.1	6.28
	0.0	24.6	3.21	29.5	3.85	34.3	4.49	34.3	4.49	38.9	5.09	43.5	5.69	48.1	6.29
	5.0	24.6	3.22	29.5	3.86	34.3	4.50	34.3	4.50	38.9	5.10	43.5	5.71	48.1	6.31
	10.0	24.6	3.23	29.5	3.87	34.3	4.52	34.3	4.52	38.9	5.14	43.5	5.77	48.1	6.38
	15.0	24.6	3.24	29.5	3.91	34.3	4.61	34.3	4.61	38.9	5.26	43.5	5.92	48.1	6.54
	20.0	24.6	3.35	29.5	4.08	34.3	4.87	34.3	4.87	38.9	5.58	43.5	6.42	48.1	7.44
	25.0	24.6	3.87	29.5	4.78	34.3	5.93	34.3	5.93	38.9	6.99	43.5	8.14	48.1	9.38
	30.0	24.6	4.83	29.5	5.96	34.3	7.34	34.3	7.34	38.9	8.62	43.5	10.00	48.1	11.47
	35.0	24.6	5.86	29.5	7.22	34.3	8.85	34.3	8.85	38.9	10.38	43.4	11.94	45.3	12.00
	40.0	24.6	6.98	29.5	8.59	34.3	10.50	34.3	10.50	38.4	12.00	40.1	12.00	41.8	12.00
	43.0	24.6	7.68	29.5	9.45	34.3	11.55	34.3	11.55	36.6	12.00	37.8	11.62	38.7	11.07
	46.0	24.3	8.35	28.3	9.02	28.3	9.02	28.3	9.02	29.2	8.65	30.2	8.36	31.5	8.14
	52.0	10.4	3.48	11.4	3.48	12.3	3.48	12.3	3.48	13.6	3.58	15.0	3.70	16.6	3.82

Combination :Indoor/outdoor capacity ratio	Outdoor air temp. °CDB	Indoor air temp. : °CWB													
		14.0		16.0		18.0		19.0		21.0		23.0		25.0	
		TC	PI	TC	PI	TC	PI	TC	PI	TC	PI	TC	PI	TC	PI
		kW	kW	kW	kW	kW	kW	kW	kW	kW	kW	kW	kW	kW	kW
100%	-10.0	22.3	2.92	26.8	3.50	31.3	4.08	33.5	4.37	38.0	4.96	42.4	5.54	46.9	6.12
	-5.0	22.3	2.92	26.8	3.50	31.3	4.09	33.5	4.38	38.0	4.96	42.4	5.54	46.9	6.13
	0.0	22.3	2.92	26.8	3.51	31.3	4.09	33.5	4.38	38.0	4.97	42.4	5.55	46.9	6.13
	5.0	22.3	2.93	26.8	3.51	31.3	4.10	33.5	4.39	38.0	4.98	42.4	5.57	46.9	6.16
	10.0	22.3	2.94	26.8	3.52	31.3	4.11	33.5	4.41	38.0	5.01	42.4	5.62	46.9	6.22
	15.0	22.3	2.95	26.8	3.56	31.3	4.18	33.5	4.49	38.0	5.12	42.4	5.76	46.9	6.38
	20.0	22.3	3.05	26.8	3.71	31.3	4.39	33.5	4.74	38.0	5.43	42.4	6.17	46.9	7.14
	25.0	22.3	3.54	26.8	4.36	31.3	5.25	33.5	5.73	38.0	6.75	42.4	7.85	46.9	9.03
	30.0	22.3	4.41	26.8	5.43	31.3	6.52	33.5	7.10	38.0	8.33	42.4	9.65	46.9	11.05
	35.0	22.3	5.35	26.8	6.57	31.3	7.88	33.5	8.57	38.0	10.03	42.4	11.59	44.9	12.00
	40.0	22.3	6.36	26.8	7.80	31.3	9.35	33.5	10.16	38.0	11.87	39.8	12.00	41.5	12.00
	43.0	22.3	7.00	26.8	8.59	31.3	10.29	33.5	11.18	36.3	12.00	37.6	11.72	38.4	11.13
	46.0	22.1	7.60	26.5	9.33	27.8	9.30	28.2	9.06	28.9	8.66	29.9	8.35	31.1	8.11
	52.0	9.6	3.27	10.4	3.31	11.5	3.38	12.0	3.42	13.3	3.51	14.7	3.62	16.2	3.73

* Use the above table when choosing the model of outdoor unit.
See “1-8. Calculation of Actual Capacity of Indoor Unit” under the section 2.

1. Capacity of Outdoor Unit

U-12MF3E8 (Cooling)

Capacity Ratio 30-130%

TC: Total capacity (kW), PI: Power input (kW)

Combination :Indoor/outdoor capacity ratio	Outdoor air temp. °CDB	Indoor air temp. : °CWB													
		14.0		16.0		18.0		19.0		21.0		23.0		25.0	
		TC	PI	TC	PI	TC	PI	TC	PI	TC	PI	TC	PI	TC	PI
		kW	kW	kW	kW	kW	kW	kW	kW	kW	kW	kW	kW	kW	kW
90%	-10.0	20.1	2.62	24.1	3.15	28.1	3.67	30.2	3.94	34.2	4.46	38.2	4.99	42.2	5.51
	-5.0	20.1	2.63	24.1	3.15	28.1	3.68	30.2	3.94	34.2	4.47	38.2	4.99	42.2	5.52
	0.0	20.1	2.63	24.1	3.16	28.1	3.68	30.2	3.95	34.2	4.47	38.2	5.00	42.2	5.52
	5.0	20.1	2.64	24.1	3.16	28.1	3.69	30.2	3.95	34.2	4.48	38.2	5.01	42.2	5.54
	10.0	20.1	2.64	24.1	3.17	28.1	3.70	30.2	3.96	34.2	4.50	38.2	5.04	42.2	5.59
	15.0	20.1	2.65	24.1	3.19	28.1	3.74	30.2	4.02	34.2	4.58	38.2	5.15	42.2	5.72
	20.0	20.1	2.72	24.1	3.31	28.1	3.91	30.2	4.21	34.2	4.82	38.2	5.44	42.2	6.06
	25.0	20.1	3.14	24.1	3.83	28.1	4.58	30.2	4.98	34.2	5.82	38.2	6.73	42.2	7.70
	30.0	20.1	3.92	24.1	4.78	28.1	5.70	30.2	6.19	34.2	7.22	38.2	8.31	42.2	9.47
	35.0	20.1	4.75	24.1	5.79	28.1	6.91	30.2	7.48	34.2	8.71	38.2	10.01	42.2	11.39
	40.0	20.1	5.65	24.1	6.89	28.1	8.20	30.2	8.89	34.2	10.33	38.2	11.85	40.0	12.00
	43.0	20.1	6.22	24.1	7.58	28.1	9.03	30.2	9.79	34.2	11.37	36.6	12.00	37.5	11.52
	46.0	19.9	6.75	23.9	8.23	27.9	9.81	27.7	9.32	28.2	8.81	28.9	8.40	29.8	8.06
	52.0	9.1	3.19	9.8	3.18	10.6	3.20	11.1	3.22	12.1	3.27	13.2	3.32	14.4	3.39

Combination :Indoor/outdoor capacity ratio	Outdoor air temp. °CDB	Indoor air temp. : °CWB													
		14.0		16.0		18.0		19.0		21.0		23.0		25.0	
		TC	PI	TC	PI	TC	PI	TC	PI	TC	PI	TC	PI	TC	PI
		kW	kW	kW	kW	kW	kW	kW	kW	kW	kW	kW	kW	kW	kW
80%	-10.0	17.9	2.33	21.4	2.80	25.0	3.27	26.8	3.50	30.4	3.97	33.9	4.43	37.5	4.90
	-5.0	17.9	2.34	21.4	2.80	25.0	3.27	26.8	3.50	30.4	3.97	33.9	4.44	37.5	4.90
	0.0	17.9	2.34	21.4	2.81	25.0	3.27	26.8	3.51	30.4	3.98	33.9	4.44	37.5	4.91
	5.0	17.9	2.34	21.4	2.81	25.0	3.28	26.8	3.51	30.4	3.98	33.9	4.45	37.5	4.92
	10.0	17.9	2.35	21.4	2.82	25.0	3.29	26.8	3.52	30.4	3.99	33.9	4.47	37.5	4.95
	15.0	17.9	2.36	21.4	2.83	25.0	3.31	26.8	3.55	30.4	4.04	33.9	4.54	37.5	5.05
	20.0	17.9	2.40	21.4	2.91	25.0	3.43	26.8	3.69	30.4	4.23	33.9	4.77	37.5	5.31
	25.0	17.9	2.72	21.4	3.35	25.0	3.96	26.8	4.28	30.4	4.97	33.9	5.70	37.5	6.48
	30.0	17.9	3.45	21.4	4.17	25.0	4.94	26.8	5.34	30.4	6.18	33.9	7.08	37.5	8.02
	35.0	17.9	4.18	21.4	5.06	25.0	5.99	26.8	6.46	30.4	7.48	33.9	8.55	37.5	9.67
	40.0	17.9	4.97	21.4	6.01	25.0	7.12	26.8	7.69	30.4	8.89	33.9	10.14	37.5	11.46
	43.0	17.9	5.47	21.4	6.62	25.0	7.84	26.8	8.47	30.4	9.78	33.9	11.17	36.6	12.00
	46.0	17.7	5.93	21.2	7.19	24.8	8.52	26.5	9.21	27.7	9.15	28.2	8.63	28.7	8.18
	52.0	8.8	3.14	9.3	3.09	9.9	3.06	10.3	3.06	11.1	3.06	11.9	3.07	12.9	3.10

Combination :Indoor/outdoor capacity ratio	Outdoor air temp. °CDB	Indoor air temp. : °CWB													
		14.0		16.0		18.0		19.0		21.0		23.0		25.0	
		TC	PI	TC	PI	TC	PI	TC	PI	TC	PI	TC	PI	TC	PI
		kW	kW	kW	kW	kW	kW	kW	kW	kW	kW	kW	kW	kW	kW
70%	-10.0	15.6	2.04	18.8	2.45	21.9	2.86	23.5	3.06	26.6	3.47	29.7	3.88	32.8	4.29
	-5.0	15.6	2.04	18.8	2.45	21.9	2.86	23.5	3.07	26.6	3.47	29.7	3.88	32.8	4.29
	0.0	15.6	2.05	18.8	2.46	21.9	2.87	23.5	3.07	26.6	3.48	29.7	3.89	32.8	4.30
	5.0	15.6	2.05	18.8	2.46	21.9	2.87	23.5	3.08	26.6	3.49	29.7	3.90	32.8	4.30
	10.0	15.6	2.06	18.8	2.47	21.9	2.88	23.5	3.08	26.6	3.49	29.7	3.90	32.8	4.32
	15.0	15.6	2.07	18.8	2.48	21.9	2.89	23.5	3.10	26.6	3.52	29.7	3.95	32.8	4.38
	20.0	15.6	2.09	18.8	2.52	21.9	2.96	23.5	3.19	26.6	3.65	29.7	4.11	32.8	4.58
	25.0	15.6	2.32	18.8	2.85	21.9	3.38	23.5	3.64	26.6	4.19	29.7	4.77	32.8	5.38
	30.0	15.6	3.01	18.8	3.60	21.9	4.22	23.5	4.55	26.6	5.23	29.7	5.94	32.8	6.69
	35.0	15.6	3.64	18.8	4.36	21.9	5.12	23.5	5.51	26.6	6.34	29.7	7.20	32.8	8.10
	40.0	15.6	4.32	18.8	5.19	21.9	6.10	23.5	6.57	26.6	7.54	29.7	8.56	32.8	9.62
	43.0	15.6	4.75	18.8	5.71	21.9	6.71	23.5	7.23	26.6	8.31	29.7	9.43	32.8	10.60
	46.0	15.5	5.15	18.6	6.20	21.7	7.29	23.2	7.86	26.3	9.03	27.6	9.11	28.0	8.54
	52.0	8.5	3.12	8.9	3.02	9.3	2.96	9.6	2.93	10.2	2.89	10.8	2.87	11.6	2.85

Combination :Indoor/outdoor capacity ratio	Outdoor air temp. °CDB	Indoor air temp. : °CWB													
		14.0		16.0		18.0		19.0		21.0		23.0		25.0	
		TC	PI	TC	PI	TC	PI	TC	PI	TC	PI	TC	PI	TC	PI
		kW	kW	kW	kW	kW	kW	kW	kW	kW	kW	kW	kW	kW	kW
60%	-10.0	13.4	1.75	16.1	2.10	18.8	2.45	20.1	2.63	22.8	2.98	25.5	3.33	28.1	3.68
	-5.0	13.4	1.75	16.1	2.10	18.8	2.45	20.1	2.63	22.8	2.98	25.5	3.33	28.1	3.68
	0.0	13.4	1.76	16.1	2.11	18.8	2.46	20.1	2.63	22.8	2.98	25.5	3.33	28.1	3.68
	5.0	13.4	1.76	16.1	2.11	18.8	2.46	20.1	2.64	22.8	2.99	25.5	3.34	28.1	3.69
	10.0	13.4	1.76	16.1	2.12	18.8	2.47	20.1	2.64	22.8	3.00	25.5	3.35	28.1	3.70
	15.0	13.4	1.77	16.1	2.13	18.8	2.48	20.1	2.65	22.8	3.01	25.5	3.37	28.1	3.73
	20.0	13.4	1.78	16.1	2.14	18.8	2.51	20.1	2.70	22.8	3.08	25.5	3.47	28.1	3.86
	25.0	13.4	1.93	16.1	2.37	18.8	2.81	20.1	3.02	22.8	3.48	25.5	3.92	28.1	4.39
	30.0	13.4	2.59	16.1	3.06	18.8	3.56	20.1	3.81	22.8	4.35	25.5	4.91	28.1	5.49
	35.0	13.4	3.12	16.1	3.71	18.8	4.32	20.1	4.62	22.8	5.28	25.5	5.96	28.1	6.66
	40.0	13.4	3.70	16.1	4.40	18.8	5.14	20.1	5.51	22.8	6.29	25.5	7.09	28.1	7.93
	43.0	13.4	4.06	16.1	4.84	18.8	5.66	20.1	6.07	22.8	6.93	25.5	7.82	28.1	8.74
	46.0	13.3	4.41	15.9	5.26	18.6	6.14	19.9	6.60	22.6	7.53	25.2	8.50	27.9	9.50
	52.0	8.3	3.14	8.5	3.01	8.8	2.91	9.0	2.86	9.4	2.78	9.9	2.72	10.4	2.67

* Use the above table when choosing the model of outdoor unit.
See “1-8. Calculation of Actual Capacity of Indoor Unit” under the section 2.

1. Capacity of Outdoor Unit

U-12MF3E8 (Cooling)

Capacity Ratio 30-130%

TC: Total capacity (kW), PI: Power input (kW)

Combination :Indoor/outdoor capacity ratio	Outdoor air temp. °CDB	Indoor air temp. : °CWB													
		14.0		16.0		18.0		19.0		21.0		23.0		25.0	
		TC	PI	TC	PI	TC	PI	TC	PI	TC	PI	TC	PI	TC	PI
		kW	kW	kW	kW	kW	kW	kW	kW	kW	kW	kW	kW	kW	kW
50%	-10.0	11.2	1.46	13.4	1.75	15.6	2.04	16.8	2.19	19.0	2.48	21.2	2.77	23.5	3.06
	-5.0	11.2	1.46	13.4	1.75	15.6	2.05	16.8	2.19	19.0	2.48	21.2	2.78	23.5	3.07
	0.0	11.2	1.46	13.4	1.76	15.6	2.05	16.8	2.19	19.0	2.49	21.2	2.78	23.5	3.07
	5.0	11.2	1.47	13.4	1.76	15.6	2.05	16.8	2.20	19.0	2.49	21.2	2.78	23.5	3.08
	10.0	11.2	1.47	13.4	1.76	15.6	2.06	16.8	2.20	19.0	2.50	21.2	2.79	23.5	3.08
	15.0	11.2	1.48	13.4	1.77	15.6	2.07	16.8	2.21	19.0	2.51	21.2	2.80	23.5	3.09
	20.0	11.2	1.49	13.4	1.78	15.6	2.08	16.8	2.23	19.0	2.54	21.2	2.85	23.5	3.17
	25.0	11.2	1.56	13.4	1.91	15.6	2.26	16.8	2.43	19.0	2.80	21.2	3.16	23.5	3.52
	30.0	11.2	2.20	13.4	2.56	15.6	2.94	16.8	3.14	19.0	3.54	21.2	3.96	23.5	4.40
	35.0	11.2	2.64	13.4	3.09	15.6	3.57	16.8	3.80	19.0	4.31	21.2	4.82	23.5	5.35
	40.0	11.2	3.11	13.4	3.66	15.6	4.24	16.8	4.53	19.0	5.13	21.2	5.74	23.5	6.38
	43.0	11.2	3.41	13.4	4.03	15.6	4.66	16.8	4.99	19.0	5.65	21.2	6.33	23.5	7.03
	46.0	11.1	3.69	13.3	4.37	15.5	5.06	16.6	5.42	18.8	6.14	21.0	6.88	23.2	7.65
	52.0	8.1	3.24	8.3	3.07	8.5	2.92	8.6	2.85	8.8	2.74	9.1	2.64	9.5	2.55

Combination :Indoor/outdoor capacity ratio	Outdoor air temp. °CDB	Indoor air temp. : °CWB													
		14.0		16.0		18.0		19.0		21.0		23.0		25.0	
		TC	PI	TC	PI	TC	PI	TC	PI	TC	PI	TC	PI	TC	PI
		kW	kW	kW	kW	kW	kW	kW	kW	kW	kW	kW	kW	kW	kW
40%	-10.0	8.9	1.17	10.7	1.40	12.5	1.64	13.4	1.75	15.2	1.99	17.0	2.22	18.8	2.45
	-5.0	8.9	1.17	10.7	1.40	12.5	1.64	13.4	1.75	15.2	1.99	17.0	2.22	18.8	2.45
	0.0	8.9	1.17	10.7	1.41	12.5	1.64	13.4	1.76	15.2	1.99	17.0	2.22	18.8	2.46
	5.0	8.9	1.17	10.7	1.41	12.5	1.64	13.4	1.76	15.2	1.99	17.0	2.23	18.8	2.46
	10.0	8.9	1.18	10.7	1.41	12.5	1.65	13.4	1.76	15.2	2.00	17.0	2.23	18.8	2.47
	15.0	8.9	1.18	10.7	1.42	12.5	1.65	13.4	1.77	15.2	2.01	17.0	2.24	18.8	2.48
	20.0	8.9	1.19	10.7	1.43	12.5	1.67	13.4	1.78	15.2	2.02	17.0	2.26	18.8	2.50
	25.0	8.9	1.22	10.7	1.48	12.5	1.75	13.4	1.87	15.2	2.16	17.0	2.43	18.8	2.71
	30.0	8.9	1.83	10.7	2.10	12.5	2.38	13.4	2.52	15.2	2.82	17.0	3.12	18.8	3.42
	35.0	8.9	2.18	10.7	2.52	12.5	2.87	13.4	3.04	15.2	3.41	17.0	3.79	18.8	4.17
	40.0	8.9	2.55	10.7	2.97	12.5	3.40	13.4	3.61	15.2	4.05	17.0	4.51	18.8	4.97
	43.0	8.9	2.79	10.7	3.25	12.5	3.73	13.4	3.97	15.2	4.46	17.0	4.96	18.8	5.47
	46.0	8.8	3.01	10.6	3.52	12.4	4.04	13.3	4.31	15.0	4.85	16.8	5.39	18.6	5.95
	52.0	7.2	3.00	8.1	3.23	8.2	3.04	8.3	2.95	8.4	2.80	8.5	2.66	8.7	2.54

Combination :Indoor/outdoor capacity ratio	Outdoor air temp. °CDB	Indoor air temp. : °CWB													
		14.0		16.0		18.0		19.0		21.0		23.0		25.0	
		TC	PI	TC	PI	TC	PI	TC	PI	TC	PI	TC	PI	TC	PI
		kW	kW	kW	kW	kW	kW	kW	kW	kW	kW	kW	kW	kW	kW
30%	-10.0	6.7	0.88	8.0	1.05	9.4	1.23	10.1	1.31	11.4	1.49	12.7	1.67	14.1	1.84
	-5.0	6.7	0.88	8.0	1.05	9.4	1.23	10.1	1.32	11.4	1.49	12.7	1.67	14.1	1.84
	0.0	6.7	0.88	8.0	1.06	9.4	1.23	10.1	1.32	11.4	1.49	12.7	1.67	14.1	1.84
	5.0	6.7	0.88	8.0	1.06	9.4	1.23	10.1	1.32	11.4	1.50	12.7	1.67	14.1	1.85
	10.0	6.7	0.88	8.0	1.06	9.4	1.24	10.1	1.32	11.4	1.50	12.7	1.68	14.1	1.85
	15.0	6.7	0.89	8.0	1.07	9.4	1.24	10.1	1.33	11.4	1.51	12.7	1.68	14.1	1.86
	20.0	6.7	0.90	8.0	1.07	9.4	1.25	10.1	1.34	11.4	1.52	12.7	1.70	14.1	1.87
	25.0	6.7	0.91	8.0	1.09	9.4	1.28	10.1	1.37	11.4	1.56	12.7	1.75	14.1	1.95
	30.0	6.7	1.49	8.0	1.68	9.4	1.87	10.1	1.96	11.4	2.16	12.7	2.36	14.1	2.56
	35.0	6.7	1.75	8.0	1.98	9.4	2.23	10.1	2.34	11.4	2.60	12.7	2.85	14.1	3.10
	40.0	6.7	2.02	8.0	2.32	9.4	2.61	10.1	2.76	11.4	3.07	12.7	3.38	14.1	3.69
	43.0	6.7	2.20	8.0	2.53	9.4	2.86	10.1	3.03	11.4	3.37	12.7	3.71	14.1	4.06
	46.0	6.6	2.36	8.0	2.72	9.3	3.09	9.9	3.28	11.3	3.65	12.6	4.03	13.9	4.41
	52.0	5.4	2.36	6.5	2.72	7.6	3.09	8.1	3.27	8.1	3.05	8.2	2.86	8.3	2.70

* Use the above table when choosing the model of outdoor unit.
See “1-8. Calculation of Actual Capacity of Indoor Unit” under the section 2.

1. Capacity of Outdoor Unit

1-6. U-12MF3E8 (Heating)

Capacity Ratio 30-130%

TC: Total capacity (kW), PI: Power input (kW)

Combination :Indoor/outdoor capacity ratio	Outdoor air temp.		Indoor air temp. : °CDB													
			16.0		17.0		19.0		20.0		23.0		25.0		30.0	
			TC	PI	TC	PI	TC	PI	TC	PI	TC	PI	TC	PI	TC	PI
	°CDB	°CWB	kW	kW	kW	kW	kW	kW	kW	kW	kW	kW	kW	kW	kW	kW
130%	-19.8	-20.0	25.6	9.54	24.9	9.37	23.6	9.02	22.9	8.83	20.8	8.22	19.3	7.77	15.5	6.51
	-14.7	-15.0	27.6	9.85	26.9	9.67	25.4	9.29	24.7	9.09	22.4	8.45	20.9	7.98	16.8	6.66
	-9.6	-10.0	29.7	10.22	29.0	10.03	27.4	9.63	26.7	9.41	24.2	8.73	22.6	8.23	18.2	6.85
	-4.4	-5.0	34.2	11.06	33.3	10.86	31.6	10.40	30.7	10.15	27.9	9.35	26.0	8.75	20.9	7.23
	-1.8	-2.5	37.3	11.44	36.4	11.23	34.5	10.77	33.5	10.52	30.5	9.72	28.4	9.13	22.9	7.51
	0.8	0.0	40.5	11.65	39.7	11.49	37.6	11.00	36.5	10.74	33.3	9.91	31.0	9.30	25.0	7.65
	2.8	2.0	42.6	11.65	42.0	11.65	39.9	11.17	38.8	10.91	35.4	10.06	32.8	9.38	25.4	7.22
	6.0	5.0	45.9	11.65	44.8	11.40	41.8	10.59	40.3	10.19	35.8	9.02	32.8	8.25	25.4	6.39
	7.0	6.0	46.3	11.25	44.8	10.86	41.8	10.10	40.3	9.72	35.8	8.61	32.8	7.89	25.4	6.13
	8.6	7.5	46.3	10.42	44.8	10.06	41.8	9.37	40.3	9.03	35.8	8.01	32.8	7.35	25.4	5.73
	11.2	10.0	46.3	9.10	44.8	8.81	41.8	8.22	40.3	7.93	35.8	7.07	32.8	6.51	25.4	5.12
	16.4	15.0	46.3	6.76	44.8	6.57	41.8	6.18	40.3	5.98	35.8	5.40	32.8	5.01	25.4	4.03
	24.0	18.0	46.3	6.50	44.8	6.30	41.8	5.91	40.3	5.72	35.8	5.13	32.8	4.74	25.4	3.77

Combination :Indoor/outdoor capacity ratio	Outdoor air temp.		Indoor air temp. : °CDB													
			16.0		17.0		19.0		20.0		23.0		25.0		30.0	
			TC	PI	TC	PI	TC	PI	TC	PI	TC	PI	TC	PI	TC	PI
	°CDB	°CWB	kW	kW	kW	kW	kW	kW	kW	kW	kW	kW	kW	kW	kW	kW
120%	-19.8	-20.0	25.5	9.46	24.9	9.30	23.5	8.94	22.8	8.75	20.7	8.15	19.2	7.71	15.4	6.46
	-14.7	-15.0	27.5	9.78	26.8	9.60	25.4	9.22	24.6	9.02	22.4	8.38	20.8	7.92	16.7	6.61
	-9.6	-10.0	29.7	10.15	29.0	9.96	27.4	9.56	26.6	9.35	24.2	8.67	22.5	8.17	18.1	6.80
	-4.4	-5.0	34.1	10.97	33.3	10.77	31.5	10.32	30.6	10.09	27.9	9.30	25.9	8.72	20.9	7.18
	-1.8	-2.5	37.3	11.33	36.4	11.11	34.4	10.65	33.5	10.41	30.4	9.62	28.3	9.05	22.8	7.45
	0.8	0.0	40.7	11.60	39.6	11.37	37.6	10.88	36.5	10.63	33.2	9.80	30.9	9.21	24.8	7.51
	2.8	2.0	42.8	11.65	42.0	11.55	39.9	11.06	38.7	10.80	35.0	9.82	32.1	8.99	24.8	6.96
	6.0	5.0	45.2	11.18	43.8	10.80	40.8	10.06	39.4	9.69	35.0	8.61	32.1	7.90	24.8	6.15
	7.0	6.0	45.2	10.64	43.8	10.28	40.8	9.58	39.4	9.24	35.0	8.22	32.1	7.54	24.8	5.90
	8.6	7.5	45.2	9.85	43.8	9.53	40.8	8.89	39.4	8.58	35.0	7.64	32.1	7.03	24.8	5.52
	11.2	10.0	45.2	8.59	43.8	8.33	40.8	7.79	39.4	7.53	35.0	6.74	32.1	6.22	24.8	4.93
	16.4	15.0	45.2	6.36	43.8	6.19	40.8	5.84	39.4	5.67	35.0	5.14	32.1	4.78	24.8	3.87
	24.0	18.0	45.2	6.36	43.8	6.17	40.8	5.78	39.4	5.59	35.0	5.02	32.1	4.64	24.8	3.69

Combination :Indoor/outdoor capacity ratio	Outdoor air temp.		Indoor air temp. : °CDB													
			16.0		17.0		19.0		20.0		23.0		25.0		30.0	
			TC	PI	TC	PI	TC	PI	TC	PI	TC	PI	TC	PI	TC	PI
	°CDB	°CWB	kW	kW	kW	kW	kW	kW	kW	kW	kW	kW	kW	kW	kW	kW
110%	-19.8	-20.0	25.5	9.39	24.8	9.23	23.5	8.87	22.8	8.69	20.7	8.08	19.2	7.65	15.4	6.40
	-14.7	-15.0	27.5	9.71	26.8	9.53	25.3	9.16	24.6	8.96	22.3	8.32	20.8	7.86	16.6	6.56
	-9.6	-10.0	29.7	10.09	28.9	9.89	27.4	9.49	26.6	9.28	24.1	8.61	22.5	8.12	18.0	6.74
	-4.4	-5.0	34.1	10.88	33.3	10.68	31.5	10.25	30.6	10.02	27.8	9.25	25.9	8.68	20.8	7.13
	-1.8	-2.5	37.3	11.21	36.3	11.00	34.4	10.55	33.4	10.31	30.4	9.53	28.3	8.97	22.7	7.38
	0.8	0.0	40.6	11.48	39.6	11.25	37.5	10.77	36.4	10.52	33.1	9.71	30.9	9.12	24.2	7.23
	2.8	2.0	43.1	11.65	42.0	11.43	39.8	10.95	38.4	10.56	34.2	9.38	31.3	8.60	24.2	6.70
	6.0	5.0	44.1	10.57	42.7	10.23	39.9	9.55	38.4	9.21	34.2	8.21	31.3	7.55	24.2	5.92
	7.0	6.0	44.1	10.05	42.7	9.73	39.9	9.09	38.4	8.78	34.2	7.84	31.3	7.21	24.2	5.67
	8.6	7.5	44.1	9.30	42.7	9.01	39.9	8.43	38.4	8.14	34.2	7.29	31.3	6.72	24.2	5.31
	11.2	10.0	44.1	8.11	42.7	7.87	39.9	7.38	38.4	7.14	34.2	6.43	31.3	5.95	24.2	4.74
	16.4	15.0	44.1	6.22	42.7	6.03	39.9	5.66	38.4	5.47	34.2	4.91	31.3	4.56	24.2	3.72
	24.0	18.0	44.1	6.22	42.7	6.03	39.9	5.66	38.4	5.47	34.2	4.91	31.3	4.54	24.2	3.61

Combination :Indoor/outdoor capacity ratio	Outdoor air temp.		Indoor air temp. : °CDB													
			16.0		17.0		19.0		20.0		23.0		25.0		30.0	
			TC	PI	TC	PI	TC	PI	TC	PI	TC	PI	TC	PI	TC	PI
	°CDB	°CWB	kW	kW	kW	kW	kW	kW	kW	kW	kW	kW	kW	kW	kW	kW
100%	-19.8	-20.0	25.5	9.32	24.8	9.16	23.4	8.81	22.7	8.62	20.6	8.02	19.1	7.59	15.3	6.36
	-14.7	-15.0	27.5	9.64	26.8	9.47	25.3	9.09	24.6	8.89	22.3	8.26	20.7	7.80	16.6	6.51
	-9.6	-10.0	29.7	10.02	28.9	9.83	27.3	9.43	26.5	9.22	24.1	8.55	22.4	8.06	18.0	6.70
	-4.4	-5.0	34.1	10.78	33.2	10.59	31.5	10.17	30.6	9.94	27.8	9.19	25.8	8.63	20.7	7.06
	-1.8	-2.5	37.3	11.10	36.3	10.89	34.4	10.45	33.4	10.21	30.3	9.44	28.2	8.88	22.6	7.32
	0.8	0.0	40.6	11.36	39.6	11.14	37.5	10.66	36.4	10.41	33.1	9.61	30.6	8.92	23.6	6.96
	2.8	2.0	43.1	11.53	41.7	11.15	38.9	10.41	37.5	10.04	33.3	8.95	30.6	8.23	23.6	6.44
	6.0	5.0	43.1	9.99	41.7	9.68	38.9	9.06	37.5	8.75	33.3	7.83	30.6	7.20	23.6	5.68
	7.0	6.0	43.1	9.50	41.7	9.20	38.9	8.62	37.5	8.32	33.3	7.45	30.6	6.88	23.6	5.45
	8.6	7.5	43.1	8.76	41.7	8.50	38.9	7.97	37.5	7.71	33.3	6.93	30.6	6.41	23.6	5.10
	11.2	10.0	43.1	7.63	41.7	7.41	38.9	6.98	37.5	6.77	33.3	6.12	30.6	5.68	23.6	4.56
	16.4	15.0	43.1	6.07	41.7	5.89	38.9	5.53	37.5	5.35	33.3	4.80	30.6	4.44	23.6	3.53
	24.0	18.0	43.1	6.07	41.7	5.89	38.9	5.53	37.5	5.35	33.3	4.80	30.6	4.44	23.6	3.53

* Use the above table when choosing the model of outdoor unit.
See “1-8. Calculation of Actual Capacity of Indoor Unit” under the section 2.

1. Capacity of Outdoor Unit

U-12MF3E8 (Heating)

Capacity Ratio 30-130%

TC: Total capacity (kW), PI: Power input (kW)

Combination :Indoor/outdoor capacity ratio	Outdoor air temp.		Indoor air temp. : °CDB													
			16.0		17.0		19.0		20.0		23.0		25.0		30.0	
			TC	PI	TC	PI	TC	PI	TC	PI	TC	PI	TC	PI	TC	PI
	°CDB	°CWB	kW	kW	kW	kW	kW	kW	kW	kW	kW	kW	kW	kW	kW	kW
90%	-19.8	-20.0	25.4	9.10	24.7	8.94	23.4	8.60	22.7	8.42	20.5	7.83	19.0	7.40	15.1	6.20
	-14.7	-15.0	27.5	9.44	26.7	9.26	25.3	8.89	24.5	8.70	22.2	8.07	20.6	7.62	16.4	6.36
	-9.6	-10.0	29.7	9.86	28.9	9.65	27.3	9.24	26.5	9.03	24.0	8.36	22.3	7.88	17.8	6.54
	-4.4	-5.0	34.2	10.45	33.3	10.27	31.5	9.88	30.5	9.66	27.7	8.96	25.7	8.43	20.5	6.95
	-1.8	-2.5	37.3	10.72	36.3	10.52	34.4	10.10	33.3	9.87	30.0	9.04	27.5	8.36	21.3	6.62
	0.8	0.0	38.8	10.06	37.5	9.78	35.0	9.20	33.8	8.91	30.0	8.04	27.5	7.45	21.3	5.94
	2.8	2.0	38.8	9.18	37.5	8.93	35.0	8.42	33.8	8.16	30.0	7.38	27.5	6.86	21.3	5.53
	6.0	5.0	38.8	7.99	37.5	7.81	35.0	7.41	33.8	7.21	30.0	6.57	27.5	6.12	21.3	4.92
	7.0	6.0	38.8	7.76	37.5	7.55	35.0	7.13	33.8	6.92	30.0	6.28	27.5	5.84	21.3	4.72
	8.6	7.5	38.8	7.14	37.5	6.96	35.0	6.59	33.8	6.40	30.0	5.83	27.5	5.44	21.3	4.42
	11.2	10.0	38.8	6.18	37.5	6.04	35.0	5.75	33.8	5.60	30.0	5.13	27.5	4.81	21.3	3.95
	16.4	15.0	38.8	5.51	37.5	5.35	35.0	5.02	33.8	4.86	30.0	4.37	27.5	4.04	21.3	3.23
	24.0	18.0	38.8	5.51	37.5	5.35	35.0	5.02	33.8	4.86	30.0	4.37	27.5	4.04	21.3	3.23

Combination :Indoor/outdoor capacity ratio	Outdoor air temp.		Indoor air temp. : °CDB													
			16.0		17.0		19.0		20.0		23.0		25.0		30.0	
			TC	PI	TC	PI	TC	PI	TC	PI	TC	PI	TC	PI	TC	PI
	°CDB	°CWB	kW	kW	kW	kW	kW	kW	kW	kW	kW	kW	kW	kW	kW	kW
80%	-19.8	-20.0	25.6	9.02	24.9	8.85	23.5	8.50	22.8	8.32	20.6	7.74	19.1	7.31	15.2	6.12
	-14.7	-15.0	27.7	9.31	27.0	9.18	25.5	8.81	24.7	8.62	22.3	7.99	20.7	7.54	16.4	6.28
	-9.6	-10.0	30.0	9.79	29.2	9.61	27.6	9.20	26.7	8.97	24.2	8.29	22.4	7.81	17.8	6.47
	-4.4	-5.0	34.4	10.22	33.3	9.96	31.1	9.42	30.0	9.15	26.7	8.30	24.4	7.73	18.9	6.22
	-1.8	-2.5	34.4	9.07	33.3	8.84	31.1	8.38	30.0	8.15	26.7	7.43	24.4	6.93	18.9	5.62
	0.8	0.0	34.4	7.95	33.3	7.78	31.1	7.42	30.0	7.24	26.7	6.65	24.4	6.23	18.9	5.10
	2.8	2.0	34.4	7.35	33.3	7.20	31.1	6.87	30.0	6.71	26.7	6.17	24.4	5.79	18.9	4.75
	6.0	5.0	34.4	6.49	33.3	6.36	31.1	6.09	30.0	5.94	26.7	5.48	24.4	5.14	18.9	4.20
	7.0	6.0	34.4	6.24	33.3	6.10	31.1	5.82	30.0	5.67	26.7	5.22	24.4	4.90	18.9	4.04
	8.6	7.5	34.4	5.72	33.3	5.61	31.1	5.36	30.0	5.24	26.7	4.84	24.4	4.56	18.9	3.79
	11.2	10.0	34.4	4.95	33.3	4.84	31.1	4.65	30.0	4.56	26.7	4.25	24.4	4.02	18.9	3.38
	16.4	15.0	34.4	4.95	33.3	4.80	31.1	4.51	30.0	4.37	26.7	3.93	24.4	3.64	18.9	2.92
	24.0	18.0	34.4	4.95	33.3	4.80	31.1	4.51	30.0	4.37	26.7	3.93	24.4	3.64	18.9	2.92

Combination :Indoor/outdoor capacity ratio	Outdoor air temp.		Indoor air temp. : °CDB													
			16.0		17.0		19.0		20.0		23.0		25.0		30.0	
			TC	PI	TC	PI	TC	PI	TC	PI	TC	PI	TC	PI	TC	PI
	°CDB	°CWB	kW	kW	kW	kW	kW	kW	kW	kW	kW	kW	kW	kW	kW	kW
70%	-19.8	-20.0	26.3	9.13	25.6	8.96	24.1	8.61	23.3	8.42	21.0	7.82	19.5	7.39	15.4	6.17
	-14.7	-15.0	28.5	9.52	27.7	9.29	26.1	8.93	25.3	8.73	22.8	8.08	21.1	7.62	16.5	6.24
	-9.6	-10.0	30.1	9.58	29.2	9.36	27.2	8.89	26.3	8.64	23.3	7.85	21.4	7.28	16.5	5.88
	-4.4	-5.0	30.1	8.06	29.2	7.89	27.2	7.56	26.3	7.38	23.3	6.81	21.4	6.40	16.5	5.27
	-1.8	-2.5	30.1	7.24	29.2	7.10	27.2	6.81	26.3	6.65	23.3	6.16	21.4	5.79	16.5	4.79
	0.8	0.0	30.1	6.44	29.2	6.32	27.2	6.08	26.3	5.95	23.3	5.52	21.4	5.21	16.5	4.34
	2.8	2.0	30.1	5.93	29.2	5.83	27.2	5.61	26.3	5.49	23.3	5.11	21.4	4.83	16.5	4.04
	6.0	5.0	30.1	5.19	29.2	5.11	27.2	4.93	26.3	4.82	23.3	4.49	21.4	4.25	16.5	3.54
	7.0	6.0	30.1	4.92	29.2	4.84	27.2	4.67	26.3	4.57	23.3	4.27	21.4	4.05	16.5	3.42
	8.6	7.5	30.1	4.49	29.2	4.43	27.2	4.29	26.3	4.21	23.3	3.96	21.4	3.76	16.5	3.20
	11.2	10.0	30.1	4.39	29.2	4.26	27.2	4.01	26.3	3.88	23.3	3.50	21.4	3.31	16.5	2.86
	16.4	15.0	30.1	4.39	29.2	4.26	27.2	4.01	26.3	3.88	23.3	3.50	21.4	3.24	16.5	2.61
	24.0	18.0	30.1	4.39	29.2	4.26	27.2	4.01	26.3	3.88	23.3	3.50	21.4	3.24	16.5	2.61

Combination :Indoor/outdoor capacity ratio	Outdoor air temp.		Indoor air temp. : °CDB													
			16.0		17.0		19.0		20.0		23.0		25.0		30.0	
			TC	PI	TC	PI	TC	PI	TC	PI	TC	PI	TC	PI	TC	PI
	°CDB	°CWB	kW	kW	kW	kW	kW	kW	kW	kW	kW	kW	kW	kW	kW	kW
60%	-19.8	-20.0	25.8	8.70	25.0	8.55	23.3	8.13	22.5	7.91	20.0	7.24	18.3	6.78	14.2	5.55
	-14.7	-15.0	25.8	8.20	25.0	8.04	23.3	7.68	22.5	7.49	20.0	6.83	18.3	6.40	14.2	5.24
	-9.6	-10.0	25.8	7.57	25.0	7.43	23.3	7.14	22.5	6.98	20.0	6.48	18.3	6.10	14.2	4.97
	-4.4	-5.0	25.8	6.49	25.0	6.38	23.3	6.15	22.5	6.02	20.0	5.61	18.3	5.30	14.2	4.43
	-1.8	-2.5	25.8	5.79	25.0	5.71	23.3	5.51	22.5	5.40	20.0	5.05	18.3	4.79	14.2	4.03
	0.8	0.0	25.8	5.13	25.0	5.05	23.3	4.90	22.5	4.81	20.0	4.52	18.3	4.29	14.2	3.64
	2.8	2.0	25.8	4.70	25.0	4.64	23.3	4.50	22.5	4.43	20.0	4.17	18.3	3.97	14.2	3.37
	6.0	5.0	25.8	4.02	25.0	3.98	23.3	3.87	22.5	3.82	20.0	3.61	18.3	3.46	14.2	2.95
	7.0	6.0	25.8	3.83	25.0	3.75	23.3	3.66	22.5	3.61	20.0	3.43	18.3	3.29	14.2	2.85
	8.6	7.5	25.8	3.83	25.0	3.72	23.3	3.50	22.5	3.39	20.0	3.18	18.3	3.06	14.2	2.67
	11.2	10.0	25.8	3.83	25.0	3.72	23.3	3.50	22.5	3.39	20.0	3.06	18.3	2.85	14.2	2.38
	16.4	15.0	25.8	3.83	25.0	3.72	23.3	3.50	22.5	3.39	20.0	3.06	18.3	2.85	14.2	2.30
	24.0	18.0	25.8	3.83	25.0	3.72	23.3	3.50	22.5	3.39	20.0	3.06	18.3	2.85	14.2	2.30

* Use the above table when choosing the model of outdoor unit.
See “1-8. Calculation of Actual Capacity of Indoor Unit” under the section 2.

1. Capacity of Outdoor Unit

U-12MF3E8 (Heating)

Capacity Ratio 30-130%

TC: Total capacity (kW), PI: Power input (kW)

Combination :Indoor/outdoor capacity ratio	Outdoor air temp.		Indoor air temp. : °CDB													
			16.0		17.0		19.0		20.0		23.0		25.0		30.0	
			TC	PI	TC	PI	TC	PI	TC	PI	TC	PI	TC	PI	TC	PI
	°CDB	°CWB	kW	kW	kW	kW	kW	kW	kW	kW	kW	kW	kW	kW	kW	kW
50%	-19.8	-20.0	21.5	7.01	20.8	6.88	19.4	6.59	18.8	6.41	16.7	5.90	15.3	5.54	11.8	4.59
	-14.7	-15.0	21.5	6.49	20.8	6.39	19.4	6.17	18.8	6.04	16.7	5.63	15.3	5.29	11.8	4.35
	-9.6	-10.0	21.5	6.00	20.8	5.91	19.4	5.71	18.8	5.60	16.7	5.24	15.3	4.97	11.8	4.16
	-4.4	-5.0	21.5	5.10	20.8	5.04	19.4	4.89	18.8	4.80	16.7	4.52	15.3	4.30	11.8	3.65
	-1.8	-2.5	21.5	4.53	20.8	4.48	19.4	4.36	18.8	4.29	16.7	4.06	15.3	3.87	11.8	3.32
	0.8	0.0	21.5	3.99	20.8	3.95	19.4	3.86	18.8	3.81	16.7	3.62	15.3	3.46	11.8	2.98
	2.8	2.0	21.5	3.60	20.8	3.57	19.4	3.50	18.8	3.46	16.7	3.30	15.3	3.16	11.8	2.75
	6.0	5.0	21.5	3.26	20.8	3.17	19.4	2.99	18.8	2.95	16.7	2.84	15.3	2.75	11.8	2.42
	7.0	6.0	21.5	3.26	20.8	3.17	19.4	2.99	18.8	2.90	16.7	2.70	15.3	2.62	11.8	2.33
	8.6	7.5	21.5	3.26	20.8	3.17	19.4	2.99	18.8	2.90	16.7	2.63	15.3	2.45	11.8	2.19
	11.2	10.0	21.5	3.26	20.8	3.17	19.4	2.99	18.8	2.90	16.7	2.63	15.3	2.45	11.8	1.99
	16.4	15.0	21.5	3.26	20.8	3.17	19.4	2.99	18.8	2.90	16.7	2.63	15.3	2.45	11.8	1.99
	24.0	18.0	21.5	3.26	20.8	3.17	19.4	2.99	18.8	2.90	16.7	2.63	15.3	2.45	11.8	1.99

Combination :Indoor/outdoor capacity ratio	Outdoor air temp.		Indoor air temp. : °CDB													
			16.0		17.0		19.0		20.0		23.0		25.0		30.0	
			TC	PI	TC	PI	TC	PI	TC	PI	TC	PI	TC	PI	TC	PI
	°CDB	°CWB	kW	kW	kW	kW	kW	kW	kW	kW	kW	kW	kW	kW	kW	kW
40%	-19.8	-20.0	17.2	5.39	16.7	5.32	15.6	5.15	15.0	5.05	13.3	4.69	12.2	4.41	9.4	3.68
	-14.7	-15.0	17.2	4.99	16.7	4.92	15.6	4.77	15.0	4.69	13.3	4.42	12.2	4.20	9.4	3.50
	-9.6	-10.0	17.2	4.59	16.7	4.54	15.6	4.41	15.0	4.34	13.3	4.10	12.2	3.91	9.4	3.34
	-4.4	-5.0	17.2	3.88	16.7	3.85	15.6	3.76	15.0	3.71	13.3	3.53	12.2	3.38	9.4	2.92
	-1.8	-2.5	17.2	3.43	16.7	3.40	15.6	3.34	15.0	3.30	13.3	3.15	12.2	3.03	9.4	2.64
	0.8	0.0	17.2	2.95	16.7	2.93	15.6	2.89	15.0	2.87	13.3	2.77	12.2	2.67	9.4	2.37
	2.8	2.0	17.2	2.70	16.7	2.63	15.6	2.61	15.0	2.59	13.3	2.52	12.2	2.45	9.4	2.19
	6.0	5.0	17.2	2.70	16.7	2.63	15.6	2.48	15.0	2.41	13.3	2.19	12.2	2.13	9.4	1.94
	7.0	6.0	17.2	2.70	16.7	2.63	15.6	2.48	15.0	2.41	13.3	2.19	12.2	2.05	9.4	1.86
	8.6	7.5	17.2	2.70	16.7	2.63	15.6	2.48	15.0	2.41	13.3	2.19	12.2	2.05	9.4	1.75
	11.2	10.0	17.2	2.70	16.7	2.63	15.6	2.48	15.0	2.41	13.3	2.19	12.2	2.05	9.4	1.68
	16.4	15.0	17.2	2.70	16.7	2.63	15.6	2.48	15.0	2.41	13.3	2.19	12.2	2.05	9.4	1.68
	24.0	18.0	17.2	2.70	16.7	2.63	15.6	2.48	15.0	2.41	13.3	2.19	12.2	2.05	9.4	1.68

Combination :Indoor/outdoor capacity ratio	Outdoor air temp.		Indoor air temp. : °CDB													
			16.0		17.0		19.0		20.0		23.0		25.0		30.0	
			TC	PI	TC	PI	TC	PI	TC	PI	TC	PI	TC	PI	TC	PI
	°CDB	°CWB	kW	kW	kW	kW	kW	kW	kW	kW	kW	kW	kW	kW	kW	kW
30%	-19.8	-20.0	12.9	3.92	12.5	3.88	11.7	3.78	11.3	3.73	10.0	3.53	9.2	3.35	7.1	2.82
	-14.7	-15.0	12.9	3.62	12.5	3.59	11.7	3.50	11.3	3.46	10.0	3.28	9.2	3.15	7.1	2.70
	-9.6	-10.0	12.9	3.33	12.5	3.30	11.7	3.23	11.3	3.19	10.0	3.05	9.2	2.93	7.1	2.55
	-4.4	-5.0	12.9	2.77	12.5	2.75	11.7	2.71	11.3	2.69	10.0	2.59	9.2	2.50	7.1	2.22
	-1.8	-2.5	12.9	2.41	12.5	2.40	11.7	2.39	11.3	2.37	10.0	2.30	9.2	2.24	7.1	2.01
	0.8	0.0	12.9	2.14	12.5	2.08	11.7	2.07	11.3	2.06	10.0	2.03	9.2	1.98	7.1	1.81
	2.8	2.0	12.9	2.14	12.5	2.08	11.7	1.97	11.3	1.92	10.0	1.85	9.2	1.82	7.1	1.68
	6.0	5.0	12.9	2.14	12.5	2.08	11.7	1.97	11.3	1.92	10.0	1.76	9.2	1.65	7.1	1.50
	7.0	6.0	12.9	2.14	12.5	2.08	11.7	1.97	11.3	1.92	10.0	1.76	9.2	1.65	7.1	1.44
	8.6	7.5	12.9	2.14	12.5	2.08	11.7	1.97	11.3	1.92	10.0	1.76	9.2	1.65	7.1	1.38
	11.2	10.0	12.9	2.14	12.5	2.08	11.7	1.97	11.3	1.92	10.0	1.76	9.2	1.65	7.1	1.38
	16.4	15.0	12.9	2.14	12.5	2.08	11.7	1.97	11.3	1.92	10.0	1.76	9.2	1.65	7.1	1.38
	24.0	18.0	12.9	2.14	12.5	2.08	11.7	1.97	11.3	1.92	10.0	1.76	9.2	1.65	7.1	1.38

* Use the above table when choosing the model of outdoor unit.
See “1-8. Calculation of Actual Capacity of Indoor Unit” under the section 2.

1. Capacity of Outdoor Unit

1-7. U-14MF3E8 (Cooling)

Capacity Ratio 30-130%

TC: Total capacity (kW), PI: Power input (kW)

Combination :Indoor/outdoor capacity ratio	Outdoor air temp. °CDB	Indoor air temp. : °CWB													
		14.0		16.0		18.0		19.0		21.0		23.0		25.0	
		TC	PI	TC	PI	TC	PI	TC	PI	TC	PI	TC	PI	TC	PI
		kW	kW	kW	kW	kW	kW	kW	kW	kW	kW	kW	kW	kW	kW
130%	-10.0	34.7	4.82	41.6	5.78	43.0	5.98	43.0	5.98	48.7	6.78	54.5	7.58	60.2	8.38
	-5.0	34.7	4.82	41.6	5.79	43.0	5.99	43.0	5.99	48.7	6.79	54.5	7.59	60.2	8.38
	0.0	34.7	4.83	41.6	5.79	43.0	6.00	43.0	6.00	48.7	6.79	54.5	7.59	60.2	8.39
	5.0	34.7	4.83	41.6	5.80	43.0	6.00	43.0	6.00	48.7	6.81	54.5	7.62	60.2	8.42
	10.0	34.7	4.84	41.6	5.81	43.0	6.04	43.0	6.04	48.7	6.86	54.5	7.69	60.2	8.50
	15.0	34.7	4.86	41.6	5.86	43.0	6.14	43.0	6.14	48.7	7.01	54.5	7.85	60.2	8.67
	20.0	34.7	5.00	41.6	6.07	43.0	6.45	43.0	6.45	48.7	7.38	54.5	8.70	60.2	10.13
	25.0	34.7	5.66	41.6	7.08	43.0	7.95	43.0	7.95	48.7	9.43	54.5	11.03	60.2	12.76
	30.0	34.7	7.12	41.6	8.87	43.0	9.86	43.0	9.86	48.7	11.63	54.5	13.54	59.5	15.12
	35.0	34.7	8.69	41.6	10.79	43.0	11.90	43.0	11.90	48.7	14.00	52.7	15.12	54.9	15.12
	40.0	34.7	10.37	41.6	12.86	43.0	14.12	43.0	14.12	46.5	15.12	48.6	15.12	50.7	15.12
	43.0	34.7	11.45	41.6	14.17	42.3	15.12	42.3	15.12	44.3	15.12	45.6	14.51	46.9	13.89
	46.0	34.2	11.30	34.2	11.30	34.2	11.30	34.2	11.30	35.4	10.89	36.8	10.58	38.6	10.36
	52.0	14.3	4.45	15.3	4.45	15.3	4.45	15.3	4.45	17.0	4.62	18.9	4.80	20.9	4.98

Combination :Indoor/outdoor capacity ratio	Outdoor air temp. °CDB	Indoor air temp. : °CWB													
		14.0		16.0		18.0		19.0		21.0		23.0		25.0	
		TC	PI	TC	PI	TC	PI	TC	PI	TC	PI	TC	PI	TC	PI
		kW	kW	kW	kW	kW	kW	kW	kW	kW	kW	kW	kW	kW	kW
120%	-10.0	32.0	4.45	38.4	5.34	42.0	5.85	42.0	5.85	47.6	6.63	53.2	7.40	58.8	8.18
	-5.0	32.0	4.45	38.4	5.34	42.0	5.85	42.0	5.85	47.6	6.63	53.2	7.41	58.8	8.19
	0.0	32.0	4.46	38.4	5.35	42.0	5.86	42.0	5.86	47.6	6.64	53.2	7.42	58.8	8.20
	5.0	32.0	4.46	38.4	5.36	42.0	5.86	42.0	5.86	47.6	6.65	53.2	7.44	58.8	8.22
	10.0	32.0	4.47	38.4	5.36	42.0	5.89	42.0	5.89	47.6	6.70	53.2	7.51	58.8	8.30
	15.0	32.0	4.49	38.4	5.41	42.0	5.99	42.0	5.99	47.6	6.83	53.2	7.67	58.8	8.47
	20.0	32.0	4.61	38.4	5.61	42.0	6.29	42.0	6.29	47.6	7.19	53.2	8.37	58.8	9.74
	25.0	32.0	5.23	38.4	6.52	42.0	7.69	42.0	7.69	47.6	9.11	53.2	10.64	58.8	12.29
	30.0	32.0	6.57	38.4	8.16	42.0	9.54	42.0	9.54	47.6	11.25	53.2	13.08	58.8	15.04
	35.0	32.0	8.01	38.4	9.93	42.0	11.53	42.0	11.53	47.6	13.55	52.3	15.12	54.4	15.12
	40.0	32.0	9.57	38.4	11.83	42.0	13.68	42.0	13.68	46.2	15.12	48.2	15.12	50.3	15.12
	43.0	32.0	10.55	38.4	13.04	42.0	15.06	42.0	15.06	43.9	15.12	45.3	14.59	46.5	13.93
	46.0	31.7	11.33	34.0	11.33	34.0	11.33	34.0	11.33	35.1	10.89	36.5	10.55	38.1	10.30
	52.0	13.4	4.38	14.7	4.38	15.0	4.38	15.0	4.38	16.6	4.53	18.4	4.69	20.4	4.86

Combination :Indoor/outdoor capacity ratio	Outdoor air temp. °CDB	Indoor air temp. : °CWB													
		14.0		16.0		18.0		19.0		21.0		23.0		25.0	
		TC	PI	TC	PI	TC	PI	TC	PI	TC	PI	TC	PI	TC	PI
		kW	kW	kW	kW	kW	kW	kW	kW	kW	kW	kW	kW	kW	kW
110%	-10.0	29.3	4.08	35.2	4.90	41.0	5.71	41.0	5.71	46.5	6.47	51.9	7.23	57.4	7.99
	-5.0	29.3	4.08	35.2	4.90	41.0	5.71	41.0	5.71	46.5	6.47	51.9	7.24	57.4	7.99
	0.0	29.3	4.09	35.2	4.91	41.0	5.72	41.0	5.72	46.5	6.48	51.9	7.24	57.4	8.00
	5.0	29.3	4.09	35.2	4.91	41.0	5.72	41.0	5.72	46.5	6.49	51.9	7.26	57.4	8.03
	10.0	29.3	4.10	35.2	4.92	41.0	5.75	41.0	5.75	46.5	6.54	51.9	7.33	57.4	8.10
	15.0	29.3	4.12	35.2	4.96	41.0	5.84	41.0	5.84	46.5	6.66	51.9	7.49	57.4	8.27
	20.0	29.3	4.23	35.2	5.14	41.0	6.12	41.0	6.12	46.5	7.00	51.9	8.06	57.4	9.36
	25.0	29.3	4.81	35.2	5.97	41.0	7.43	41.0	7.43	46.5	8.79	51.9	10.26	57.4	11.84
	30.0	29.3	6.03	35.2	7.47	41.0	9.23	41.0	9.23	46.5	10.87	51.9	12.62	57.4	14.50
	35.0	29.3	7.35	35.2	9.08	41.0	11.16	41.0	11.16	46.5	13.10	51.8	15.10	54.0	15.12
	40.0	29.3	8.77	35.2	10.82	41.0	13.25	41.0	13.25	45.8	15.12	47.8	15.12	49.9	15.12
	43.0	29.3	9.67	35.2	11.93	41.0	14.59	41.0	14.59	43.6	15.12	45.1	14.69	46.2	13.98
	46.0	29.0	10.52	33.8	11.37	33.8	11.37	33.8	11.37	34.8	10.90	36.1	10.53	37.6	10.25
	52.0	12.4	4.31	13.6	4.31	14.7	4.31	14.7	4.31	16.2	4.44	18.0	4.59	19.8	4.74

Combination :Indoor/outdoor capacity ratio	Outdoor air temp. °CDB	Indoor air temp. : °CWB													
		14.0		16.0		18.0		19.0		21.0		23.0		25.0	
		TC	PI	TC	PI	TC	PI	TC	PI	TC	PI	TC	PI	TC	PI
		kW	kW	kW	kW	kW	kW	kW	kW	kW	kW	kW	kW	kW	kW
100%	-10.0	26.7	3.71	32.0	4.45	37.3	5.20	40.0	5.57	45.3	6.31	50.7	7.05	56.0	7.79
	-5.0	26.7	3.71	32.0	4.46	37.3	5.20	40.0	5.57	45.3	6.32	50.7	7.06	56.0	7.80
	0.0	26.7	3.72	32.0	4.46	37.3	5.21	40.0	5.58	45.3	6.32	50.7	7.06	56.0	7.81
	5.0	26.7	3.72	32.0	4.47	37.3	5.21	40.0	5.58	45.3	6.33	50.7	7.08	56.0	7.83
	10.0	26.7	3.73	32.0	4.48	37.3	5.23	40.0	5.61	45.3	6.37	50.7	7.14	56.0	7.90
	15.0	26.7	3.75	32.0	4.52	37.3	5.30	40.0	5.69	45.3	6.49	50.7	7.29	56.0	8.07
	20.0	26.7	3.85	32.0	4.68	37.3	5.53	40.0	5.96	45.3	6.81	50.7	7.75	56.0	8.98
	25.0	26.7	4.39	32.0	5.43	37.3	6.57	40.0	7.18	45.3	8.48	50.7	9.88	56.0	11.39
	30.0	26.7	5.50	32.0	6.79	37.3	8.19	40.0	8.93	45.3	10.50	50.7	12.17	56.0	13.97
	35.0	26.7	6.70	32.0	8.25	37.3	9.93	40.0	10.80	45.3	12.66	50.7	14.65	53.5	15.12
	40.0	26.7	7.98	32.0	9.82	37.3	11.80	40.0	12.83	45.3	15.01	47.4	15.12	49.4	15.12
	43.0	26.7	8.80	32.0	10.83	37.3	12.99	40.0	14.13	43.3	15.12	44.9	14.81	45.9	14.06
	46.0	26.4	9.57	31.7	11.77	33.3	11.73	33.6	11.42	34.6	10.92	35.8	10.52	37.2	10.21
	52.0	11.4	4.05	12.5	4.10	13.7	4.18	14.4	4.24	15.9	4.35	17.5	4.48	19.3	4.62

* Use the above table when choosing the model of outdoor unit.
See “1-8. Calculation of Actual Capacity of Indoor Unit” under the section 2.

1. Capacity of Outdoor Unit

U-14MF3E8 (Cooling)

Capacity Ratio 30-130%

TC: Total capacity (kW), PI: Power input (kW)

Combination :Indoor/outdoor capacity ratio	Outdoor air temp. °CDB	Indoor air temp. : °CWB													
		14.0		16.0		18.0		19.0		21.0		23.0		25.0	
		TC	PI	TC	PI	TC	PI	TC	PI	TC	PI	TC	PI	TC	PI
		kW	kW	kW	kW	kW	kW	kW	kW	kW	kW	kW	kW	kW	kW
90%	-10.0	24.0	3.34	28.8	4.01	33.6	4.68	36.0	5.01	40.8	5.68	45.6	6.35	50.4	7.02
	-5.0	24.0	3.34	28.8	4.01	33.6	4.68	36.0	5.02	40.8	5.68	45.6	6.35	50.4	7.02
	0.0	24.0	3.35	28.8	4.02	33.6	4.69	36.0	5.02	40.8	5.69	45.6	6.36	50.4	7.03
	5.0	24.0	3.35	28.8	4.02	33.6	4.69	36.0	5.03	40.8	5.70	45.6	6.37	50.4	7.05
	10.0	24.0	3.36	28.8	4.03	33.6	4.70	36.0	5.04	40.8	5.72	45.6	6.41	50.4	7.10
	15.0	24.0	3.37	28.8	4.05	33.6	4.75	36.0	5.10	40.8	5.81	45.6	6.52	50.4	7.24
	20.0	24.0	3.44	28.8	4.18	33.6	4.93	36.0	5.30	40.8	6.07	45.6	6.83	50.4	7.60
	25.0	24.0	3.89	28.8	4.76	33.6	5.71	36.0	6.22	40.8	7.30	45.6	8.45	50.4	9.69
	30.0	24.0	4.87	28.8	5.97	33.6	7.14	36.0	7.77	40.8	9.07	45.6	10.47	50.4	11.95
	35.0	24.0	5.93	28.8	7.26	33.6	8.68	36.0	9.41	40.8	10.98	45.6	12.64	50.4	14.39
	40.0	24.0	7.07	28.8	8.65	33.6	10.33	36.0	11.21	40.8	13.04	45.6	14.98	47.7	15.12
	43.0	24.0	7.80	28.8	9.54	33.6	11.38	36.0	12.35	40.8	14.36	43.6	15.12	44.8	14.56
	46.0	23.8	8.48	28.5	10.37	33.3	12.38	33.1	11.76	33.7	11.11	34.5	10.58	35.6	10.15
	52.0	10.9	3.94	11.7	3.93	12.7	3.96	13.3	3.98	14.5	4.04	15.8	4.11	17.2	4.19

Combination :Indoor/outdoor capacity ratio	Outdoor air temp. °CDB	Indoor air temp. : °CWB													
		14.0		16.0		18.0		19.0		21.0		23.0		25.0	
		TC	PI	TC	PI	TC	PI	TC	PI	TC	PI	TC	PI	TC	PI
		kW	kW	kW	kW	kW	kW	kW	kW	kW	kW	kW	kW	kW	kW
80%	-10.0	21.3	2.97	25.6	3.56	29.9	4.16	32.0	4.45	36.3	5.05	40.5	5.64	44.8	6.24
	-5.0	21.3	2.97	25.6	3.57	29.9	4.16	32.0	4.46	36.3	5.05	40.5	5.65	44.8	6.24
	0.0	21.3	2.98	25.6	3.57	29.9	4.17	32.0	4.46	36.3	5.06	40.5	5.65	44.8	6.25
	5.0	21.3	2.98	25.6	3.58	29.9	4.17	32.0	4.47	36.3	5.07	40.5	5.66	44.8	6.26
	10.0	21.3	2.99	25.6	3.59	29.9	4.18	32.0	4.48	36.3	5.08	40.5	5.68	44.8	6.29
	15.0	21.3	3.00	25.6	3.60	29.9	4.20	32.0	4.51	36.3	5.13	40.5	5.76	44.8	6.39
	20.0	21.3	3.04	25.6	3.68	29.9	4.33	32.0	4.66	36.3	5.33	40.5	6.00	44.8	6.68
	25.0	21.3	3.39	25.6	4.15	29.9	4.92	32.0	5.33	36.3	6.21	40.5	7.14	44.8	8.14
	30.0	21.3	4.27	25.6	5.19	29.9	6.17	32.0	6.68	36.3	7.75	40.5	8.89	44.8	10.10
	35.0	21.3	5.21	25.6	6.32	29.9	7.51	32.0	8.11	36.3	9.41	40.5	10.77	44.8	12.21
	40.0	21.3	6.21	25.6	7.54	29.9	8.95	32.0	9.68	36.3	11.20	40.5	12.81	44.8	14.49
	43.0	21.3	6.84	25.6	8.32	29.9	9.87	32.0	10.67	36.3	12.35	40.5	14.11	43.6	15.12
	46.0	21.1	7.44	25.3	9.04	29.6	10.73	31.7	11.61	33.1	11.54	33.6	10.87	34.3	10.30
	52.0	10.5	3.87	11.1	3.81	11.9	3.78	12.3	3.77	13.2	3.77	14.3	3.79	15.4	3.82

Combination :Indoor/outdoor capacity ratio	Outdoor air temp. °CDB	Indoor air temp. : °CWB													
		14.0		16.0		18.0		19.0		21.0		23.0		25.0	
		TC	PI	TC	PI	TC	PI	TC	PI	TC	PI	TC	PI	TC	PI
		kW	kW	kW	kW	kW	kW	kW	kW	kW	kW	kW	kW	kW	kW
70%	-10.0	18.7	2.60	22.4	3.12	26.1	3.64	28.0	3.90	31.7	4.42	35.5	4.94	39.2	5.46
	-5.0	18.7	2.60	22.4	3.12	26.1	3.64	28.0	3.90	31.7	4.42	35.5	4.94	39.2	5.46
	0.0	18.7	2.60	22.4	3.13	26.1	3.65	28.0	3.91	31.7	4.43	35.5	4.95	39.2	5.47
	5.0	18.7	2.61	22.4	3.13	26.1	3.65	28.0	3.91	31.7	4.43	35.5	4.96	39.2	5.48
	10.0	18.7	2.62	22.4	3.14	26.1	3.66	28.0	3.92	31.7	4.44	35.5	4.96	39.2	5.49
	15.0	18.7	2.63	22.4	3.15	26.1	3.67	28.0	3.94	31.7	4.47	35.5	5.01	39.2	5.56
	20.0	18.7	2.65	22.4	3.19	26.1	3.75	28.0	4.03	31.7	4.61	35.5	5.19	39.2	5.77
	25.0	18.7	2.89	22.4	3.54	26.1	4.20	28.0	4.52	31.7	5.21	35.5	5.95	39.2	6.73
	30.0	18.7	3.71	22.4	4.46	26.1	5.26	28.0	5.67	31.7	6.54	35.5	7.45	39.2	8.41
	35.0	18.7	4.51	22.4	5.44	26.1	6.41	28.0	6.89	31.7	7.96	35.5	9.05	39.2	10.20
	40.0	18.7	5.38	22.4	6.49	26.1	7.65	28.0	8.25	31.7	9.49	35.5	10.79	39.2	12.14
	43.0	18.7	5.93	22.4	7.15	26.1	8.43	28.0	9.10	31.7	10.46	35.5	11.89	39.2	13.38
	46.0	18.5	6.44	22.2	7.78	25.9	9.17	27.7	9.90	31.4	11.39	33.0	11.49	33.4	10.76
	52.0	10.2	3.85	10.6	3.73	11.1	3.65	11.4	3.61	12.1	3.57	12.9	3.53	13.8	3.51

Combination :Indoor/outdoor capacity ratio	Outdoor air temp. °CDB	Indoor air temp. : °CWB													
		14.0		16.0		18.0		19.0		21.0		23.0		25.0	
		TC	PI	TC	PI	TC	PI	TC	PI	TC	PI	TC	PI	TC	PI
		kW	kW	kW	kW	kW	kW	kW	kW	kW	kW	kW	kW	kW	kW
60%	-10.0	16.0	2.23	19.2	2.67	22.4	3.12	24.0	3.34	27.2	3.79	30.4	4.23	33.6	4.68
	-5.0	16.0	2.23	19.2	2.68	22.4	3.12	24.0	3.35	27.2	3.79	30.4	4.24	33.6	4.68
	0.0	16.0	2.23	19.2	2.68	22.4	3.13	24.0	3.35	27.2	3.80	30.4	4.24	33.6	4.69
	5.0	16.0	2.24	19.2	2.68	22.4	3.13	24.0	3.35	27.2	3.80	30.4	4.25	33.6	4.70
	10.0	16.0	2.24	19.2	2.69	22.4	3.14	24.0	3.36	27.2	3.81	30.4	4.26	33.6	4.70
	15.0	16.0	2.25	19.2	2.70	22.4	3.15	24.0	3.37	27.2	3.82	30.4	4.28	33.6	4.74
	20.0	16.0	2.26	19.2	2.72	22.4	3.19	24.0	3.42	27.2	3.90	30.4	4.39	33.6	4.88
	25.0	16.0	2.42	19.2	2.96	22.4	3.50	24.0	3.77	27.2	4.33	30.4	4.88	33.6	5.47
	30.0	16.0	3.18	19.2	3.78	22.4	4.41	24.0	4.74	27.2	5.42	30.4	6.13	33.6	6.87
	35.0	16.0	3.86	19.2	4.60	22.4	5.38	24.0	5.77	27.2	6.61	30.4	7.47	33.6	8.37
	40.0	16.0	4.59	19.2	5.49	22.4	6.42	24.0	6.90	27.2	7.89	30.4	8.92	33.6	9.98
	43.0	16.0	5.06	19.2	6.05	22.4	7.09	24.0	7.62	27.2	8.71	30.4	9.84	33.6	11.01
	46.0	15.8	5.49	19.0	6.58	22.2	7.71	23.8	8.29	26.9	9.48	30.1	10.71	33.3	11.99
	52.0	9.9	3.88	10.2	3.71	10.5	3.58	10.7	3.52	11.2	3.42	11.8	3.34	12.4	3.28

* Use the above table when choosing the model of outdoor unit.
See “1-8. Calculation of Actual Capacity of Indoor Unit” under the section 2.

1. Capacity of Outdoor Unit

U-14MF3E8 (Cooling)

Capacity Ratio 30-130%

TC: Total capacity (kW), PI: Power input (kW)

Combination :Indoor/outdoor capacity ratio	Outdoor air temp. °CDB	Indoor air temp. : °CWB													
		14.0		16.0		18.0		19.0		21.0		23.0		25.0	
		TC	PI	TC	PI	TC	PI	TC	PI	TC	PI	TC	PI	TC	PI
		kW	kW	kW	kW	kW	kW	kW	kW	kW	kW	kW	kW	kW	kW
50%	-10.0	13.3	1.86	16.0	2.23	18.7	2.60	20.0	2.79	22.7	3.16	25.3	3.53	28.0	3.90
	-5.0	13.3	1.86	16.0	2.23	18.7	2.60	20.0	2.79	22.7	3.16	25.3	3.53	28.0	3.90
	0.0	13.3	1.86	16.0	2.23	18.7	2.61	20.0	2.79	22.7	3.16	25.3	3.54	28.0	3.91
	5.0	13.3	1.87	16.0	2.24	18.7	2.61	20.0	2.80	22.7	3.17	25.3	3.54	28.0	3.91
	10.0	13.3	1.87	16.0	2.24	18.7	2.62	20.0	2.80	22.7	3.18	25.3	3.55	28.0	3.92
	15.0	13.3	1.88	16.0	2.25	18.7	2.63	20.0	2.81	22.7	3.19	25.3	3.56	28.0	3.93
	20.0	13.3	1.89	16.0	2.26	18.7	2.64	20.0	2.83	22.7	3.22	25.3	3.61	28.0	4.01
	25.0	13.3	1.97	16.0	2.40	18.7	2.83	20.0	3.04	22.7	3.50	25.3	3.95	28.0	4.39
	30.0	13.3	2.68	16.0	3.14	18.7	3.63	20.0	3.88	22.7	4.39	25.3	4.93	28.0	5.48
	35.0	13.3	3.24	16.0	3.82	18.7	4.42	20.0	4.72	22.7	5.37	25.3	6.02	28.0	6.70
	40.0	13.3	3.84	16.0	4.55	18.7	5.28	20.0	5.65	22.7	6.41	25.3	7.20	28.0	8.01
	43.0	13.3	4.22	16.0	5.01	18.7	5.82	20.0	6.23	22.7	7.08	25.3	7.95	28.0	8.84
	46.0	13.2	4.58	15.8	5.44	18.5	6.33	19.8	6.78	22.4	7.70	25.1	8.65	27.7	9.63
	52.0	9.7	4.00	9.9	3.78	10.1	3.60	10.2	3.51	10.5	3.37	10.9	3.24	11.3	3.13

Combination :Indoor/outdoor capacity ratio	Outdoor air temp. °CDB	Indoor air temp. : °CWB													
		14.0		16.0		18.0		19.0		21.0		23.0		25.0	
		TC	PI	TC	PI	TC	PI	TC	PI	TC	PI	TC	PI	TC	PI
		kW	kW	kW	kW	kW	kW	kW	kW	kW	kW	kW	kW	kW	kW
40%	-10.0	10.7	1.49	12.8	1.78	14.9	2.08	16.0	2.23	18.1	2.53	20.3	2.82	22.4	3.12
	-5.0	10.7	1.49	12.8	1.79	14.9	2.08	16.0	2.23	18.1	2.53	20.3	2.83	22.4	3.12
	0.0	10.7	1.49	12.8	1.79	14.9	2.09	16.0	2.23	18.1	2.53	20.3	2.83	22.4	3.13
	5.0	10.7	1.49	12.8	1.79	14.9	2.09	16.0	2.24	18.1	2.54	20.3	2.83	22.4	3.13
	10.0	10.7	1.50	12.8	1.80	14.9	2.09	16.0	2.24	18.1	2.54	20.3	2.84	22.4	3.14
	15.0	10.7	1.50	12.8	1.80	14.9	2.10	16.0	2.25	18.1	2.55	20.3	2.85	22.4	3.15
	20.0	10.7	1.51	12.8	1.81	14.9	2.11	16.0	2.26	18.1	2.56	20.3	2.87	22.4	3.18
	25.0	10.7	1.54	12.8	1.87	14.9	2.20	16.0	2.36	18.1	2.71	20.3	3.05	22.4	3.40
	30.0	10.7	2.21	12.8	2.55	14.9	2.91	16.0	3.09	18.1	3.46	20.3	3.85	22.4	4.24
	35.0	10.7	2.65	12.8	3.09	14.9	3.54	16.0	3.75	18.1	4.23	20.3	4.70	22.4	5.19
	40.0	10.7	3.13	12.8	3.66	14.9	4.20	16.0	4.48	18.1	5.04	20.3	5.62	22.4	6.21
	43.0	10.7	3.43	12.8	4.02	14.9	4.63	16.0	4.94	18.1	5.56	20.3	6.20	22.4	6.85
	46.0	10.6	3.71	12.7	4.37	14.8	5.03	15.8	5.37	18.0	6.05	20.1	6.75	22.2	7.46
	52.0	8.6	3.70	9.7	3.99	9.8	3.75	9.9	3.64	10.0	3.44	10.2	3.27	10.4	3.11

Combination :Indoor/outdoor capacity ratio	Outdoor air temp. °CDB	Indoor air temp. : °CWB													
		14.0		16.0		18.0		19.0		21.0		23.0		25.0	
		TC	PI	TC	PI	TC	PI	TC	PI	TC	PI	TC	PI	TC	PI
		kW	kW	kW	kW	kW	kW	kW	kW	kW	kW	kW	kW	kW	kW
30%	-10.0	8.0	1.12	9.6	1.34	11.2	1.56	12.0	1.67	13.6	1.90	15.2	2.12	16.8	2.34
	-5.0	8.0	1.12	9.6	1.34	11.2	1.56	12.0	1.67	13.6	1.90	15.2	2.12	16.8	2.34
	0.0	8.0	1.12	9.6	1.34	11.2	1.57	12.0	1.68	13.6	1.90	15.2	2.12	16.8	2.35
	5.0	8.0	1.12	9.6	1.34	11.2	1.57	12.0	1.68	13.6	1.90	15.2	2.13	16.8	2.35
	10.0	8.0	1.12	9.6	1.35	11.2	1.57	12.0	1.68	13.6	1.91	15.2	2.13	16.8	2.36
	15.0	8.0	1.13	9.6	1.35	11.2	1.58	12.0	1.69	13.6	1.91	15.2	2.14	16.8	2.36
	20.0	8.0	1.14	9.6	1.36	11.2	1.59	12.0	1.70	13.6	1.93	15.2	2.15	16.8	2.38
	25.0	8.0	1.16	9.6	1.38	11.2	1.61	12.0	1.73	13.6	1.97	15.2	2.21	16.8	2.46
	30.0	8.0	1.77	9.6	2.01	11.2	2.25	12.0	2.38	13.6	2.63	15.2	2.88	16.8	3.14
	35.0	8.0	2.10	9.6	2.41	11.2	2.71	12.0	2.86	13.6	3.19	15.2	3.51	16.8	3.83
	40.0	8.0	2.45	9.6	2.83	11.2	3.21	12.0	3.40	13.6	3.79	15.2	4.18	16.8	4.57
	43.0	8.0	2.67	9.6	3.10	11.2	3.52	12.0	3.74	13.6	4.17	15.2	4.60	16.8	5.05
	46.0	7.9	2.89	9.5	3.35	11.1	3.82	11.9	4.05	13.5	4.53	15.0	5.01	16.6	5.49
	52.0	6.5	2.88	7.8	3.34	9.1	3.81	9.7	4.04	9.7	3.76	9.8	3.53	9.9	3.31

* Use the above table when choosing the model of outdoor unit.
See “1-8. Calculation of Actual Capacity of Indoor Unit” under the section 2.

1. Capacity of Outdoor Unit

1-8. U-14MF3E8 (Heating)

Capacity Ratio 30-130%

TC: Total capacity (kW), PI: Power input (kW)

Combination :Indoor/outdoor capacity ratio	Outdoor air temp.		Indoor air temp. : °CDB													
			16.0		17.0		19.0		20.0		23.0		25.0		30.0	
			TC	PI	TC	PI	TC	PI	TC	PI	TC	PI	TC	PI	TC	PI
	°CDB	°CWB	kW	kW	kW	kW	kW	kW	kW	kW	kW	kW	kW	kW	kW	kW
130%	-19.8	-20.0	29.9	11.65	29.2	11.45	27.6	11.02	26.8	10.79	24.4	10.06	22.7	9.51	18.3	7.97
	-14.7	-15.0	32.2	12.00	31.4	11.79	29.7	11.33	28.9	11.09	26.3	10.32	24.5	9.75	19.8	8.15
	-9.6	-10.0	34.7	12.43	33.8	12.20	32.1	11.72	31.2	11.46	28.4	10.64	26.5	10.05	21.4	8.37
	-4.4	-5.0	39.7	13.43	38.8	13.16	36.8	12.58	35.8	12.26	32.7	11.36	30.5	10.70	24.7	8.84
	-1.8	-2.5	43.4	13.99	42.4	13.73	40.2	13.17	39.1	12.88	35.7	11.90	33.3	11.19	26.9	9.20
	0.8	0.0	47.3	14.38	46.2	14.10	43.9	13.50	42.7	13.18	38.9	12.16	36.3	11.42	29.4	9.39
	2.8	2.0	50.1	14.60	48.9	14.31	46.5	13.69	45.2	13.36	41.3	12.32	38.6	11.58	30.5	9.12
	6.0	5.0	54.8	14.98	53.5	14.71	50.2	13.70	48.4	13.16	43.0	11.56	39.4	10.53	30.5	8.07
	7.0	6.0	55.5	14.67	53.8	14.13	50.2	13.07	48.4	12.55	43.0	11.04	39.4	10.07	30.5	7.73
	8.6	7.5	55.5	13.59	53.8	13.10	50.2	12.13	48.4	11.66	43.0	10.28	39.4	9.39	30.5	7.24
	11.2	10.0	55.5	11.88	53.8	11.47	50.2	10.65	48.4	10.25	43.0	9.07	39.4	8.31	30.5	6.45
	16.4	15.0	55.5	8.84	53.8	8.56	50.2	8.01	48.4	7.74	43.0	6.93	39.4	6.39	30.5	5.07
	24.0	18.0	55.5	7.97	53.8	7.73	50.2	7.25	48.4	7.01	43.0	6.29	39.4	5.81	30.5	4.61

Combination :Indoor/outdoor capacity ratio	Outdoor air temp.		Indoor air temp. : °CDB													
			16.0		17.0		19.0		20.0		23.0		25.0		30.0	
			TC	PI	TC	PI	TC	PI	TC	PI	TC	PI	TC	PI	TC	PI
	°CDB	°CWB	kW	kW	kW	kW	kW	kW	kW	kW	kW	kW	kW	kW	kW	kW
120%	-19.8	-20.0	29.8	11.54	29.1	11.34	27.5	10.92	26.7	10.69	24.3	9.96	22.6	9.42	18.2	7.90
	-14.7	-15.0	32.1	11.90	31.3	11.68	29.7	11.24	28.8	11.00	26.2	10.23	24.4	9.66	19.7	8.08
	-9.6	-10.0	34.6	12.32	33.7	12.10	32.0	11.62	31.1	11.37	28.3	10.55	26.4	9.96	21.3	8.30
	-4.4	-5.0	39.7	13.33	38.7	13.08	36.8	12.52	35.7	12.21	32.6	11.22	30.4	10.61	24.6	8.77
	-1.8	-2.5	43.4	13.84	42.3	13.58	40.2	13.03	39.1	12.74	35.6	11.78	33.2	11.08	26.8	9.12
	0.8	0.0	47.3	14.20	46.2	13.93	43.8	13.34	42.6	13.03	38.8	12.02	36.2	11.29	29.3	9.29
	2.8	2.0	50.1	14.42	48.9	14.13	46.4	13.52	45.1	13.20	41.2	12.18	38.5	11.45	29.8	8.77
	6.0	5.0	54.3	14.55	52.5	14.02	49.0	13.00	47.3	12.49	42.0	11.02	38.5	10.07	29.8	7.76
	7.0	6.0	54.3	13.85	52.5	13.36	49.0	12.39	47.3	11.91	42.0	10.52	38.5	9.62	29.8	7.43
	8.6	7.5	54.3	12.82	52.5	12.38	49.0	11.50	47.3	11.06	42.0	9.79	38.5	8.96	29.8	6.96
	11.2	10.0	54.3	11.20	52.5	10.82	49.0	10.08	47.3	9.71	42.0	8.64	38.5	7.93	29.8	6.20
	16.4	15.0	54.3	8.31	52.5	8.06	49.0	7.56	47.3	7.31	42.0	6.58	38.5	6.09	29.8	4.87
	24.0	18.0	54.3	7.80	52.5	7.57	49.0	7.10	47.3	6.86	42.0	6.16	38.5	5.69	29.8	4.51

Combination :Indoor/outdoor capacity ratio	Outdoor air temp.		Indoor air temp. : °CDB													
			16.0		17.0		19.0		20.0		23.0		25.0		30.0	
			TC	PI	TC	PI	TC	PI	TC	PI	TC	PI	TC	PI	TC	PI
	°CDB	°CWB	kW	kW	kW	kW	kW	kW	kW	kW	kW	kW	kW	kW	kW	kW
110%	-19.8	-20.0	29.8	11.43	29.0	11.24	27.5	10.81	26.7	10.59	24.2	9.87	22.5	9.34	18.1	7.83
	-14.7	-15.0	32.1	11.80	31.3	11.59	29.6	11.13	28.8	10.90	26.2	10.13	24.4	9.58	19.6	8.00
	-9.6	-10.0	34.6	12.22	33.7	12.00	31.9	11.52	31.0	11.27	28.3	10.47	26.3	9.88	21.2	8.23
	-4.4	-5.0	39.7	13.22	38.7	12.97	36.7	12.44	35.7	12.14	32.5	11.18	30.3	10.47	24.5	8.69
	-1.8	-2.5	43.4	13.68	42.3	13.43	40.1	12.89	39.0	12.60	35.5	11.66	33.1	10.97	26.7	9.03
	0.8	0.0	47.3	14.03	46.1	13.76	43.7	13.18	42.5	12.87	38.7	11.88	36.1	11.16	29.0	9.11
	2.8	2.0	50.1	14.24	48.8	13.96	46.3	13.36	45.1	13.05	41.0	11.98	37.6	10.94	29.0	8.43
	6.0	5.0	53.0	13.73	51.3	13.26	47.8	12.32	46.1	11.86	41.0	10.50	37.6	9.61	29.0	7.46
	7.0	6.0	53.0	13.07	51.3	12.62	47.8	11.74	46.1	11.30	41.0	10.02	37.6	9.18	29.0	7.14
	8.6	7.5	53.0	12.09	51.3	11.69	47.8	10.88	46.1	10.49	41.0	9.32	37.6	8.56	29.0	6.68
	11.2	10.0	53.0	10.55	51.3	10.21	47.8	9.54	46.1	9.20	41.0	8.22	37.6	7.57	29.0	5.96
	16.4	15.0	53.0	7.79	51.3	7.57	47.8	7.13	46.1	6.91	41.0	6.25	37.6	5.80	29.0	4.68
	24.0	18.0	53.0	7.63	51.3	7.40	47.8	6.94	46.1	6.71	41.0	6.02	37.6	5.56	29.0	4.42

Combination :Indoor/outdoor capacity ratio	Outdoor air temp.		Indoor air temp. : °CDB													
			16.0		17.0		19.0		20.0		23.0		25.0		30.0	
			TC	PI	TC	PI	TC	PI	TC	PI	TC	PI	TC	PI	TC	PI
	°CDB	°CWB	kW	kW	kW	kW	kW	kW	kW	kW	kW	kW	kW	kW	kW	kW
100%	-19.8	-20.0	29.7	11.33	29.0	11.13	27.4	10.71	26.6	10.50	24.2	9.78	22.5	9.25	18.0	7.76
	-14.7	-15.0	32.0	11.69	31.2	11.48	29.5	11.04	28.7	10.81	26.1	10.05	24.3	9.49	19.5	7.94
	-9.6	-10.0	34.5	12.13	33.6	11.90	31.9	11.43	31.0	11.18	28.2	10.38	26.3	9.79	21.1	8.16
	-4.4	-5.0	39.6	13.10	38.7	12.86	36.7	12.34	35.6	12.06	32.4	11.12	30.2	10.43	24.4	8.62
	-1.8	-2.5	43.3	13.52	42.2	13.28	40.1	12.75	38.9	12.46	35.4	11.53	33.0	10.85	26.6	8.94
	0.8	0.0	47.2	13.86	46.1	13.59	43.7	13.02	42.4	12.72	38.6	11.74	36.0	11.04	28.3	8.75
	2.8	2.0	50.0	14.07	48.8	13.79	46.3	13.21	45.0	12.89	40.0	11.42	36.7	10.45	28.3	8.10
	6.0	5.0	51.7	12.96	50.0	12.52	46.7	11.67	45.0	11.25	40.0	10.00	36.7	9.16	28.3	7.15
	7.0	6.0	51.7	12.32	50.0	11.91	46.7	11.11	45.0	10.70	40.0	9.52	36.7	8.75	28.3	6.85
	8.6	7.5	51.7	11.37	50.0	11.01	46.7	10.28	45.0	9.92	40.0	8.85	36.7	8.15	28.3	6.41
	11.2	10.0	51.7	9.90	50.0	9.60	46.7	9.00	45.0	8.70	40.0	7.81	36.7	7.21	28.3	5.73
	16.4	15.0	51.7	7.45	50.0	7.23	46.7	6.78	45.0	6.56	40.0	5.93	36.7	5.51	28.3	4.43
	24.0	18.0	51.7	7.45	50.0	7.23	46.7	6.78	45.0	6.56	40.0	5.89	36.7	5.44	28.3	4.32

* Use the above table when choosing the model of outdoor unit.
See “1-8. Calculation of Actual Capacity of Indoor Unit” under the section 2.

1. Capacity of Outdoor Unit

U-14MF3E8 (Heating)

Capacity Ratio 30-130%

TC: Total capacity (kW), PI: Power input (kW)

Combination :Indoor/outdoor capacity ratio	Outdoor air temp.		Indoor air temp. : °CDB													
			16.0		17.0		19.0		20.0		23.0		25.0		30.0	
			TC	PI	TC	PI	TC	PI	TC	PI	TC	PI	TC	PI	TC	PI
	°CDB	°CWB	kW	kW	kW	kW	kW	kW	kW	kW	kW	kW	kW	kW	kW	kW
90%	-19.8	-20.0	29.5	10.96	28.7	10.77	27.2	10.36	26.4	10.14	23.9	9.45	22.2	8.94	17.7	7.50
	-14.7	-15.0	31.8	11.34	31.0	11.13	29.3	10.70	28.5	10.47	25.8	9.73	24.0	9.19	19.2	7.68
	-9.6	-10.0	34.4	11.78	33.5	11.51	31.7	11.10	30.8	10.85	27.9	10.06	26.0	9.50	20.8	7.90
	-4.4	-5.0	39.5	12.60	38.5	12.38	36.5	11.91	35.4	11.65	32.2	10.81	29.9	10.18	24.0	8.37
	-1.8	-2.5	43.2	12.94	42.1	12.71	39.8	12.20	38.7	11.93	35.1	11.05	32.7	10.41	25.5	8.30
	0.8	0.0	46.5	12.93	45.0	12.54	42.0	11.76	40.5	11.37	36.0	10.19	33.0	9.41	25.5	7.44
	2.8	2.0	46.5	11.81	45.0	11.46	42.0	10.77	40.5	10.42	36.0	9.37	33.0	8.67	25.5	6.94
	6.0	5.0	46.5	10.28	45.0	10.02	42.0	9.49	40.5	9.22	36.0	8.37	33.0	7.76	25.5	6.17
	7.0	6.0	46.5	10.03	45.0	9.74	42.0	9.16	40.5	8.87	36.0	7.99	33.0	7.40	25.5	5.91
	8.6	7.5	46.5	9.24	45.0	8.98	42.0	8.46	40.5	8.20	36.0	7.42	33.0	6.89	25.5	5.54
	11.2	10.0	46.5	8.00	45.0	7.79	42.0	7.38	40.5	7.17	36.0	6.52	33.0	6.09	25.5	4.94
	16.4	15.0	46.5	6.76	45.0	6.56	42.0	6.16	40.5	5.95	36.0	5.35	33.0	4.95	25.5	3.94
	24.0	18.0	46.5	6.76	45.0	6.56	42.0	6.16	40.5	5.95	36.0	5.35	33.0	4.95	25.5	3.94

Combination :Indoor/outdoor capacity ratio	Outdoor air temp.		Indoor air temp. : °CDB													
			16.0		17.0		19.0		20.0		23.0		25.0		30.0	
			TC	PI	TC	PI	TC	PI	TC	PI	TC	PI	TC	PI	TC	PI
	°CDB	°CWB	kW	kW	kW	kW	kW	kW	kW	kW	kW	kW	kW	kW	kW	kW
80%	-19.8	-20.0	29.5	10.71	28.7	10.51	27.1	10.11	26.3	9.90	23.8	9.21	22.0	8.71	17.5	7.30
	-14.7	-15.0	31.9	11.10	31.0	10.89	29.3	10.46	28.4	10.23	25.7	9.50	23.9	8.97	19.0	7.49
	-9.6	-10.0	34.4	11.60	33.5	11.38	31.7	10.89	30.7	10.60	27.8	9.85	25.8	9.28	20.6	7.71
	-4.4	-5.0	39.7	12.19	38.6	11.99	36.5	11.54	35.4	11.30	32.0	10.46	29.3	9.70	22.7	7.74
	-1.8	-2.5	41.3	11.56	40.0	11.25	37.3	10.64	36.0	10.32	32.0	9.36	29.3	8.71	22.7	7.01
	0.8	0.0	41.3	10.11	40.0	9.88	37.3	9.40	36.0	9.16	32.0	8.38	29.3	7.83	22.7	6.36
	2.8	2.0	41.3	9.36	40.0	9.16	37.3	8.72	36.0	8.50	32.0	7.79	29.3	7.28	22.7	5.94
	6.0	5.0	41.3	8.30	40.0	8.12	37.3	7.75	36.0	7.55	32.0	6.93	29.3	6.48	22.7	5.27
	7.0	6.0	41.3	8.03	40.0	7.84	37.3	7.44	36.0	7.24	32.0	6.61	29.3	6.18	22.7	5.05
	8.6	7.5	41.3	7.37	40.0	7.20	37.3	6.86	36.0	6.68	32.0	6.13	29.3	5.75	22.7	4.73
	11.2	10.0	41.3	6.34	40.0	6.21	37.3	5.95	36.0	5.81	32.0	5.38	29.3	5.07	22.7	4.22
	16.4	15.0	41.3	6.07	40.0	5.89	37.3	5.53	36.0	5.35	32.0	4.81	29.3	4.46	22.7	3.56
	24.0	18.0	41.3	6.07	40.0	5.89	37.3	5.53	36.0	5.35	32.0	4.81	29.3	4.46	22.7	3.56

Combination :Indoor/outdoor capacity ratio	Outdoor air temp.		Indoor air temp. : °CDB													
			16.0		17.0		19.0		20.0		23.0		25.0		30.0	
			TC	PI	TC	PI	TC	PI	TC	PI	TC	PI	TC	PI	TC	PI
	°CDB	°CWB	kW	kW	kW	kW	kW	kW	kW	kW	kW	kW	kW	kW	kW	kW
70%	-19.8	-20.0	29.9	10.65	29.0	10.45	27.4	10.04	26.5	9.83	24.0	9.14	22.2	8.64	17.6	7.24
	-14.7	-15.0	32.3	11.08	31.4	10.83	29.6	10.41	28.7	10.18	26.0	9.45	24.1	8.91	19.1	7.43
	-9.6	-10.0	35.0	11.52	34.0	11.32	32.1	10.88	31.1	10.63	28.0	9.71	25.7	9.06	19.8	7.28
	-4.4	-5.0	36.2	10.19	35.0	9.96	32.7	9.49	31.5	9.24	28.0	8.50	25.7	7.98	19.8	6.54
	-1.8	-2.5	36.2	9.12	35.0	8.94	32.7	8.56	31.5	8.35	28.0	7.70	25.7	7.23	19.8	5.95
	0.8	0.0	36.2	8.13	35.0	7.98	32.7	7.65	31.5	7.48	28.0	6.92	25.7	6.51	19.8	5.39
	2.8	2.0	36.2	7.50	35.0	7.36	32.7	7.07	31.5	6.91	28.0	6.41	25.7	6.04	19.8	5.02
	6.0	5.0	36.2	6.58	35.0	6.47	32.7	6.23	31.5	6.10	28.0	5.66	25.7	5.34	19.8	4.42
	7.0	6.0	36.2	6.30	35.0	6.18	32.7	5.94	31.5	5.81	28.0	5.39	25.7	5.09	19.8	4.26
	8.6	7.5	36.2	5.76	35.0	5.66	32.7	5.46	31.5	5.35	28.0	4.99	25.7	4.73	19.8	3.99
	11.2	10.0	36.2	5.37	35.0	5.22	32.7	4.90	31.5	4.75	28.0	4.36	25.7	4.16	19.8	3.55
	16.4	15.0	36.2	5.37	35.0	5.22	32.7	4.90	31.5	4.75	28.0	4.28	25.7	3.96	19.8	3.18
	24.0	18.0	36.2	5.37	35.0	5.22	32.7	4.90	31.5	4.75	28.0	4.28	25.7	3.96	19.8	3.18

Combination :Indoor/outdoor capacity ratio	Outdoor air temp.		Indoor air temp. : °CDB													
			16.0		17.0		19.0		20.0		23.0		25.0		30.0	
			TC	PI	TC	PI	TC	PI	TC	PI	TC	PI	TC	PI	TC	PI
	°CDB	°CWB	kW	kW	kW	kW	kW	kW	kW	kW	kW	kW	kW	kW	kW	kW
60%	-19.8	-20.0	31.0	10.92	30.0	10.66	28.0	10.12	27.0	9.85	24.0	9.00	22.0	8.42	17.0	6.87
	-14.7	-15.0	31.0	10.28	30.0	10.06	28.0	9.57	27.0	9.31	24.0	8.47	22.0	7.91	17.0	6.46
	-9.6	-10.0	31.0	9.44	30.0	9.26	28.0	8.89	27.0	8.69	24.0	8.04	22.0	7.55	17.0	6.14
	-4.4	-5.0	31.0	8.11	30.0	7.97	28.0	7.67	27.0	7.50	24.0	6.97	22.0	6.58	17.0	5.48
	-1.8	-2.5	31.0	7.26	30.0	7.14	28.0	6.88	27.0	6.74	24.0	6.29	22.0	5.95	17.0	4.98
	0.8	0.0	31.0	6.43	30.0	6.33	28.0	6.12	27.0	6.01	24.0	5.62	22.0	5.33	17.0	4.50
	2.8	2.0	31.0	5.90	30.0	5.82	28.0	5.64	27.0	5.54	24.0	5.20	22.0	4.94	17.0	4.18
	6.0	5.0	31.0	5.12	30.0	5.05	28.0	4.90	27.0	4.82	24.0	4.53	22.0	4.32	17.0	3.66
	7.0	6.0	31.0	4.82	30.0	4.76	28.0	4.63	27.0	4.56	24.0	4.31	22.0	4.12	17.0	3.54
	8.6	7.5	31.0	4.68	30.0	4.55	28.0	4.28	27.0	4.19	24.0	3.98	22.0	3.82	17.0	3.31
	11.2	10.0	31.0	4.68	30.0	4.55	28.0	4.28	27.0	4.14	24.0	3.74	22.0	3.47	17.0	2.95
	16.4	15.0	31.0	4.68	30.0	4.55	28.0	4.28	27.0	4.14	24.0	3.74	22.0	3.47	17.0	2.80
	24.0	18.0	31.0	4.68	30.0	4.55	28.0	4.28	27.0	4.14	24.0	3.74	22.0	3.47	17.0	2.80

* Use the above table when choosing the model of outdoor unit.
See “1-8. Calculation of Actual Capacity of Indoor Unit” under the section 2.

1. Capacity of Outdoor Unit

U-14MF3E8 (Heating)

Capacity Ratio 30-130%

TC: Total capacity (kW), PI: Power input (kW)

Combination :Indoor/outdoor capacity ratio	Outdoor air temp.		Indoor air temp. : °CDB													
			16.0		17.0		19.0		20.0		23.0		25.0		30.0	
			TC	PI	TC	PI	TC	PI	TC	PI	TC	PI	TC	PI	TC	PI
	°CDB	°CWB	kW	kW	kW	kW	kW	kW	kW	kW	kW	kW	kW	kW	kW	kW
50%	-19.8	-20.0	25.8	8.69	25.0	8.52	23.3	8.13	22.5	7.90	20.0	7.27	18.3	6.83	14.2	5.65
	-14.7	-15.0	25.8	8.06	25.0	7.93	23.3	7.64	22.5	7.49	20.0	6.95	18.3	6.51	14.2	5.35
	-9.6	-10.0	25.8	7.45	25.0	7.33	23.3	7.08	22.5	6.94	20.0	6.48	18.3	6.13	14.2	5.11
	-4.4	-5.0	25.8	6.35	25.0	6.26	23.3	6.06	22.5	5.96	20.0	5.59	18.3	5.31	14.2	4.50
	-1.8	-2.5	25.8	5.65	25.0	5.58	23.3	5.42	22.5	5.33	20.0	5.02	18.3	4.79	14.2	4.08
	0.8	0.0	25.8	4.97	25.0	4.92	23.3	4.80	22.5	4.73	20.0	4.48	18.3	4.28	14.2	3.68
	2.8	2.0	25.8	4.54	25.0	4.50	23.3	4.40	22.5	4.34	20.0	4.11	18.3	3.94	14.2	3.40
	6.0	5.0	25.8	3.99	25.0	3.87	23.3	3.73	22.5	3.69	20.0	3.54	18.3	3.42	14.2	2.98
	7.0	6.0	25.8	3.99	25.0	3.87	23.3	3.65	22.5	3.54	20.0	3.37	18.3	3.25	14.2	2.88
	8.6	7.5	25.8	3.99	25.0	3.87	23.3	3.65	22.5	3.54	20.0	3.20	18.3	3.02	14.2	2.69
	11.2	10.0	25.8	3.99	25.0	3.87	23.3	3.65	22.5	3.54	20.0	3.20	18.3	2.98	14.2	2.42
	16.4	15.0	25.8	3.99	25.0	3.87	23.3	3.65	22.5	3.54	20.0	3.20	18.3	2.98	14.2	2.42
	24.0	18.0	25.8	3.99	25.0	3.87	23.3	3.65	22.5	3.54	20.0	3.20	18.3	2.98	14.2	2.42

Combination :Indoor/outdoor capacity ratio	Outdoor air temp.		Indoor air temp. : °CDB													
			16.0		17.0		19.0		20.0		23.0		25.0		30.0	
			TC	PI	TC	PI	TC	PI	TC	PI	TC	PI	TC	PI	TC	PI
	°CDB	°CWB	kW	kW	kW	kW	kW	kW	kW	kW	kW	kW	kW	kW	kW	kW
40%	-19.8	-20.0	20.7	6.67	20.0	6.57	18.7	6.35	18.0	6.23	16.0	5.76	14.7	5.42	11.3	4.52
	-14.7	-15.0	20.7	6.16	20.0	6.08	18.7	5.90	18.0	5.79	16.0	5.44	14.7	5.17	11.3	4.30
	-9.6	-10.0	20.7	5.68	20.0	5.61	18.7	5.45	18.0	5.36	16.0	5.05	14.7	4.81	11.3	4.10
	-4.4	-5.0	20.7	4.80	20.0	4.76	18.7	4.64	18.0	4.58	16.0	4.34	14.7	4.16	11.3	3.58
	-1.8	-2.5	20.7	4.25	20.0	4.22	18.7	4.13	18.0	4.08	16.0	3.90	14.7	3.74	11.3	3.25
	0.8	0.0	20.7	3.69	20.0	3.67	18.7	3.61	18.0	3.57	16.0	3.43	14.7	3.31	11.3	2.91
	2.8	2.0	20.7	3.30	20.0	3.29	18.7	3.25	18.0	3.23	16.0	3.12	14.7	3.03	11.3	2.69
	6.0	5.0	20.7	3.29	20.0	3.20	18.7	3.02	18.0	2.93	16.0	2.69	14.7	2.63	11.3	2.38
	7.0	6.0	20.7	3.29	20.0	3.20	18.7	3.02	18.0	2.93	16.0	2.67	14.7	2.50	11.3	2.28
	8.6	7.5	20.7	3.29	20.0	3.20	18.7	3.02	18.0	2.93	16.0	2.67	14.7	2.49	11.3	2.14
	11.2	10.0	20.7	3.29	20.0	3.20	18.7	3.02	18.0	2.93	16.0	2.67	14.7	2.49	11.3	2.04
	16.4	15.0	20.7	3.29	20.0	3.20	18.7	3.02	18.0	2.93	16.0	2.67	14.7	2.49	11.3	2.04
	24.0	18.0	20.7	3.29	20.0	3.20	18.7	3.02	18.0	2.93	16.0	2.67	14.7	2.49	11.3	2.04

Combination :Indoor/outdoor capacity ratio	Outdoor air temp.		Indoor air temp. : °CDB													
			16.0		17.0		19.0		20.0		23.0		25.0		30.0	
			TC	PI	TC	PI	TC	PI	TC	PI	TC	PI	TC	PI	TC	PI
	°CDB	°CWB	kW	kW	kW	kW	kW	kW	kW	kW	kW	kW	kW	kW	kW	kW
30%	-19.8	-20.0	15.5	4.84	15.0	4.78	14.0	4.66	13.5	4.59	12.0	4.33	11.0	4.10	8.5	3.45
	-14.7	-15.0	15.5	4.46	15.0	4.42	14.0	4.31	13.5	4.25	12.0	4.03	11.0	3.86	8.5	3.30
	-9.6	-10.0	15.5	4.10	15.0	4.07	14.0	3.98	13.5	3.93	12.0	3.74	11.0	3.59	8.5	3.12
	-4.4	-5.0	15.5	3.44	15.0	3.42	14.0	3.36	13.5	3.33	12.0	3.20	11.0	3.08	8.5	2.72
	-1.8	-2.5	15.5	2.99	15.0	2.98	14.0	2.95	13.5	2.93	12.0	2.84	11.0	2.75	8.5	2.46
	0.8	0.0	15.5	2.60	15.0	2.56	14.0	2.56	13.5	2.55	12.0	2.49	11.0	2.44	8.5	2.21
	2.8	2.0	15.5	2.60	15.0	2.53	14.0	2.40	13.5	2.33	12.0	2.27	11.0	2.23	8.5	2.05
	6.0	5.0	15.5	2.60	15.0	2.53	14.0	2.40	13.5	2.33	12.0	2.13	11.0	2.00	8.5	1.82
	7.0	6.0	15.5	2.60	15.0	2.53	14.0	2.40	13.5	2.33	12.0	2.13	11.0	2.00	8.5	1.75
	8.6	7.5	15.5	2.60	15.0	2.53	14.0	2.40	13.5	2.33	12.0	2.13	11.0	2.00	8.5	1.66
	11.2	10.0	15.5	2.60	15.0	2.53	14.0	2.40	13.5	2.33	12.0	2.13	11.0	2.00	8.5	1.66
	16.4	15.0	15.5	2.60	15.0	2.53	14.0	2.40	13.5	2.33	12.0	2.13	11.0	2.00	8.5	1.66
	24.0	18.0	15.5	2.60	15.0	2.53	14.0	2.40	13.5	2.33	12.0	2.13	11.0	2.00	8.5	1.66

* Use the above table when choosing the model of outdoor unit.
See “1-8. Calculation of Actual Capacity of Indoor Unit” under the section 2.

1. Capacity of Outdoor Unit

1-9. U-16MF3E8 (Cooling)

Capacity Ratio 30-130%

TC: Total capacity (kW), PI: Power input (kW)

Combination :Indoor/outdoor capacity ratio	Outdoor air temp. °CDB	Indoor air temp. : °CWB													
		14.0		16.0		18.0		19.0		21.0		23.0		25.0	
		TC	PI	TC	PI	TC	PI	TC	PI	TC	PI	TC	PI	TC	PI
		kW	kW	kW	kW	kW	kW	kW	kW	kW	kW	kW	kW	kW	kW
130%	-10.0	39.0	5.79	46.8	6.95	48.4	7.19	48.4	7.19	54.8	8.15	61.3	9.11	67.7	10.07
	-5.0	39.0	5.79	46.8	6.95	48.4	7.20	48.4	7.20	54.8	8.16	61.3	9.12	67.7	10.07
	0.0	39.0	5.80	46.8	6.96	48.4	7.20	48.4	7.20	54.8	8.16	61.3	9.12	67.7	10.08
	5.0	39.0	5.81	46.8	6.97	48.4	7.21	48.4	7.21	54.8	8.18	61.3	9.15	67.7	10.11
	10.0	39.0	5.81	46.8	6.98	48.4	7.25	48.4	7.25	54.8	8.24	61.3	9.22	67.7	10.19
	15.0	39.0	5.84	46.8	7.03	48.4	7.36	48.4	7.36	54.8	8.39	61.3	9.40	67.7	10.38
	20.0	39.0	5.98	46.8	7.25	48.4	7.69	48.4	7.69	54.8	8.79	61.3	10.37	67.7	12.09
	25.0	39.0	6.72	46.8	8.43	48.4	9.48	48.4	9.48	54.8	11.25	61.3	13.18	67.7	15.26
	30.0	39.0	8.47	46.8	10.58	48.4	11.77	48.4	11.77	54.8	13.90	61.3	16.20	66.8	18.06
	35.0	39.0	10.36	46.8	12.88	48.4	14.23	48.4	14.23	54.8	16.75	59.2	18.06	61.7	18.06
	40.0	39.0	12.39	46.8	15.37	48.4	16.89	48.4	16.89	52.3	18.06	54.6	18.06	56.9	18.06
	43.0	39.0	13.68	46.8	16.96	47.6	18.06	47.6	18.06	49.7	18.05	51.3	17.36	52.7	16.61
	46.0	38.4	13.50	38.4	13.50	38.4	13.50	38.4	13.50	39.8	13.01	41.4	12.64	43.4	12.38
	52.0	16.1	5.27	17.2	5.27	17.2	5.27	17.2	5.27	19.1	5.47	21.3	5.68	23.6	5.90

Combination :Indoor/outdoor capacity ratio	Outdoor air temp. °CDB	Indoor air temp. : °CWB													
		14.0		16.0		18.0		19.0		21.0		23.0		25.0	
		TC	PI	TC	PI	TC	PI	TC	PI	TC	PI	TC	PI	TC	PI
		kW	kW	kW	kW	kW	kW	kW	kW	kW	kW	kW	kW	kW	kW
120%	-10.0	36.0	5.35	43.2	6.42	47.3	7.02	47.3	7.02	53.6	7.96	59.9	8.90	66.2	9.83
	-5.0	36.0	5.35	43.2	6.42	47.3	7.03	47.3	7.03	53.6	7.97	59.9	8.90	66.2	9.84
	0.0	36.0	5.35	43.2	6.43	47.3	7.04	47.3	7.04	53.6	7.97	59.9	8.91	66.2	9.85
	5.0	36.0	5.36	43.2	6.43	47.3	7.04	47.3	7.04	53.6	7.99	59.9	8.94	66.2	9.88
	10.0	36.0	5.37	43.2	6.44	47.3	7.08	47.3	7.08	53.6	8.04	59.9	9.01	66.2	9.96
	15.0	36.0	5.39	43.2	6.50	47.3	7.18	47.3	7.18	53.6	8.18	59.9	9.18	66.2	10.14
	20.0	36.0	5.52	43.2	6.70	47.3	7.49	47.3	7.49	53.6	8.56	59.9	9.98	66.2	11.62
	25.0	36.0	6.20	43.2	7.75	47.3	9.16	47.3	9.16	53.6	10.87	59.9	12.71	66.2	14.70
	30.0	36.0	7.82	43.2	9.73	47.3	11.39	47.3	11.39	53.6	13.44	59.9	15.64	66.2	18.00
	35.0	36.0	9.55	43.2	11.85	47.3	13.78	47.3	13.78	53.6	16.21	58.7	18.06	61.2	18.06
	40.0	36.0	11.42	43.2	14.14	47.3	16.36	47.3	16.36	51.9	18.05	54.2	18.06	56.5	18.06
	43.0	36.0	12.60	43.2	15.60	46.9	17.84	46.9	17.84	49.4	18.06	51.0	17.46	52.3	16.66
	46.0	35.6	13.54	38.2	13.54	38.2	13.54	38.2	13.54	39.5	13.01	41.0	12.60	42.8	12.30
	52.0	15.0	5.18	16.5	5.18	16.8	5.18	16.8	5.18	18.7	5.36	20.7	5.55	22.9	5.76

Combination :Indoor/outdoor capacity ratio	Outdoor air temp. °CDB	Indoor air temp. : °CWB													
		14.0		16.0		18.0		19.0		21.0		23.0		25.0	
		TC	PI	TC	PI	TC	PI	TC	PI	TC	PI	TC	PI	TC	PI
		kW	kW	kW	kW	kW	kW	kW	kW	kW	kW	kW	kW	kW	kW
110%	-10.0	33.0	4.90	39.6	5.88	46.1	6.86	46.1	6.86	52.3	7.77	58.4	8.69	64.6	9.60
	-5.0	33.0	4.91	39.6	5.89	46.1	6.86	46.1	6.86	52.3	7.78	58.4	8.69	64.6	9.61
	0.0	33.0	4.91	39.6	5.89	46.1	6.87	46.1	6.87	52.3	7.78	58.4	8.70	64.6	9.61
	5.0	33.0	4.92	39.6	5.90	46.1	6.87	46.1	6.87	52.3	7.80	58.4	8.72	64.6	9.64
	10.0	33.0	4.93	39.6	5.91	46.1	6.90	46.1	6.90	52.3	7.84	58.4	8.79	64.6	9.72
	15.0	33.0	4.95	39.6	5.96	46.1	7.00	46.1	7.00	52.3	7.98	58.4	8.96	64.6	9.90
	20.0	33.0	5.07	39.6	6.15	46.1	7.30	46.1	7.30	52.3	8.34	58.4	9.60	64.6	11.16
	25.0	33.0	5.70	39.6	7.09	46.1	8.85	46.1	8.85	52.3	10.48	58.4	12.25	64.6	14.15
	30.0	33.0	7.17	39.6	8.90	46.1	11.02	46.1	11.02	52.3	12.98	58.4	15.09	64.6	17.35
	35.0	33.0	8.75	39.6	10.84	46.1	13.34	46.1	13.34	52.3	15.67	58.2	18.06	60.7	18.06
	40.0	33.0	10.46	39.6	12.92	46.1	15.85	46.1	15.85	51.5	18.06	53.7	18.06	56.0	18.06
	43.0	33.0	11.54	39.6	14.25	46.1	17.46	46.1	17.46	49.0	18.06	50.7	17.58	51.9	16.73
	46.0	32.7	12.56	38.0	13.59	38.0	13.59	38.0	13.59	39.2	13.02	40.6	12.58	42.3	12.24
	52.0	14.0	5.09	15.3	5.09	16.5	5.09	16.5	5.09	18.3	5.25	20.2	5.43	22.3	5.61

Combination :Indoor/outdoor capacity ratio	Outdoor air temp. °CDB	Indoor air temp. : °CWB													
		14.0		16.0		18.0		19.0		21.0		23.0		25.0	
		TC	PI	TC	PI	TC	PI	TC	PI	TC	PI	TC	PI	TC	PI
		kW	kW	kW	kW	kW	kW	kW	kW	kW	kW	kW	kW	kW	kW
100%	-10.0	30.0	4.46	36.0	5.35	42.0	6.24	45.0	6.69	51.0	7.58	57.0	8.47	63.0	9.37
	-5.0	30.0	4.46	36.0	5.35	42.0	6.25	45.0	6.69	51.0	7.59	57.0	8.48	63.0	9.37
	0.0	30.0	4.47	36.0	5.36	42.0	6.25	45.0	6.70	51.0	7.59	57.0	8.49	63.0	9.38
	5.0	30.0	4.47	36.0	5.37	42.0	6.26	45.0	6.71	51.0	7.60	57.0	8.51	63.0	9.41
	10.0	30.0	4.48	36.0	5.38	42.0	6.28	45.0	6.73	51.0	7.65	57.0	8.57	63.0	9.48
	15.0	30.0	4.50	36.0	5.42	42.0	6.35	45.0	6.82	51.0	7.77	57.0	8.73	63.0	9.66
	20.0	30.0	4.61	36.0	5.60	42.0	6.60	45.0	7.10	51.0	8.12	57.0	9.23	63.0	10.71
	25.0	30.0	5.20	36.0	6.45	42.0	7.82	45.0	8.55	51.0	10.11	57.0	11.79	63.0	13.61
	30.0	30.0	6.53	36.0	8.08	42.0	9.76	45.0	10.65	51.0	12.53	57.0	14.55	63.0	16.71
	35.0	30.0	7.97	36.0	9.84	42.0	11.85	45.0	12.90	51.0	15.14	57.0	17.52	60.1	18.06
	40.0	30.0	9.51	36.0	11.73	42.0	14.10	45.0	15.34	51.0	17.96	53.3	18.06	55.6	18.06
	43.0	30.0	10.49	36.0	12.93	42.0	15.54	45.0	16.90	48.6	18.06	50.5	17.72	51.6	16.82
	46.0	29.7	11.42	35.6	14.07	37.4	14.02	37.8	13.65	38.9	13.04	40.2	12.56	41.8	12.19
	52.0	12.9	4.78	14.0	4.84	15.4	4.94	16.2	5.01	17.8	5.15	19.7	5.31	21.7	5.47

* Use the above table when choosing the model of outdoor unit.
See “1-8. Calculation of Actual Capacity of Indoor Unit” under the section 2.

1. Capacity of Outdoor Unit

U-16MF3E8 (Cooling)

Capacity Ratio 30-130%

TC: Total capacity (kW), PI: Power input (kW)

Combination :Indoor/outdoor capacity ratio	Outdoor air temp. °CDB	Indoor air temp. : °CWB													
		14.0		16.0		18.0		19.0		21.0		23.0		25.0	
		TC	PI	TC	PI	TC	PI	TC	PI	TC	PI	TC	PI	TC	PI
		kW	kW	kW	kW	kW	kW	kW	kW	kW	kW	kW	kW	kW	kW
90%	-10.0	27.0	4.01	32.4	4.82	37.8	5.62	40.5	6.02	45.9	6.82	51.3	7.63	56.7	8.43
	-5.0	27.0	4.02	32.4	4.82	37.8	5.62	40.5	6.03	45.9	6.83	51.3	7.63	56.7	8.44
	0.0	27.0	4.02	32.4	4.82	37.8	5.63	40.5	6.03	45.9	6.84	51.3	7.64	56.7	8.44
	5.0	27.0	4.03	32.4	4.83	37.8	5.64	40.5	6.04	45.9	6.84	51.3	7.65	56.7	8.46
	10.0	27.0	4.04	32.4	4.84	37.8	5.65	40.5	6.05	45.9	6.87	51.3	7.69	56.7	8.52
	15.0	27.0	4.05	32.4	4.86	37.8	5.69	40.5	6.11	45.9	6.96	51.3	7.81	56.7	8.67
	20.0	27.0	4.12	32.4	5.00	37.8	5.89	40.5	6.33	45.9	7.24	51.3	8.15	56.7	9.06
	25.0	27.0	4.60	32.4	5.64	37.8	6.79	40.5	7.39	45.9	8.69	51.3	10.08	56.7	11.56
	30.0	27.0	5.77	32.4	7.09	37.8	8.50	40.5	9.25	45.9	10.82	51.3	12.50	56.7	14.28
	35.0	27.0	7.05	32.4	8.64	37.8	10.35	40.5	11.23	45.9	13.12	51.3	15.11	56.7	17.22
	40.0	27.0	8.42	32.4	10.32	37.8	12.34	40.5	13.39	45.9	15.60	51.3	17.93	53.6	18.06
	43.0	27.0	9.29	32.4	11.38	37.8	13.60	40.5	14.76	45.9	17.19	49.1	18.06	50.4	17.42
	46.0	26.7	10.11	32.1	12.39	37.4	14.81	37.2	14.05	37.9	13.27	38.9	12.64	40.0	12.12
	52.0	12.3	4.65	13.2	4.64	14.3	4.67	14.9	4.70	16.3	4.77	17.8	4.86	19.4	4.96

Combination :Indoor/outdoor capacity ratio	Outdoor air temp. °CDB	Indoor air temp. : °CWB													
		14.0		16.0		18.0		19.0		21.0		23.0		25.0	
		TC	PI	TC	PI	TC	PI	TC	PI	TC	PI	TC	PI	TC	PI
		kW	kW	kW	kW	kW	kW	kW	kW	kW	kW	kW	kW	kW	kW
80%	-10.0	24.0	3.57	28.8	4.28	33.6	5.00	36.0	5.35	40.8	6.07	45.6	6.78	50.4	7.50
	-5.0	24.0	3.57	28.8	4.29	33.6	5.00	36.0	5.36	40.8	6.07	45.6	6.79	50.4	7.50
	0.0	24.0	3.57	28.8	4.29	33.6	5.00	36.0	5.36	40.8	6.08	45.6	6.79	50.4	7.51
	5.0	24.0	3.58	28.8	4.30	33.6	5.01	36.0	5.37	40.8	6.09	45.6	6.80	50.4	7.52
	10.0	24.0	3.59	28.8	4.30	33.6	5.02	36.0	5.38	40.8	6.10	45.6	6.82	50.4	7.55
	15.0	24.0	3.60	28.8	4.32	33.6	5.05	36.0	5.41	40.8	6.16	45.6	6.91	50.4	7.66
	20.0	24.0	3.64	28.8	4.40	33.6	5.18	36.0	5.57	40.8	6.37	45.6	7.17	50.4	7.97
	25.0	24.0	4.01	28.8	4.91	33.6	5.83	36.0	6.33	40.8	7.38	45.6	8.50	50.4	9.70
	30.0	24.0	5.05	28.8	6.15	33.6	7.33	36.0	7.95	40.8	9.24	45.6	10.61	50.4	12.06
	35.0	24.0	6.17	28.8	7.51	33.6	8.94	36.0	9.66	40.8	11.23	45.6	12.87	50.4	14.59
	40.0	24.0	7.38	28.8	8.98	33.6	10.67	36.0	11.55	40.8	13.39	45.6	15.31	50.4	17.33
	43.0	24.0	8.14	28.8	9.91	33.6	11.78	36.0	12.75	40.8	14.76	45.6	16.88	49.0	18.06
	46.0	23.8	8.86	28.5	10.79	33.3	12.82	35.6	13.87	37.2	13.79	37.8	12.98	38.6	12.30
	52.0	11.8	4.57	12.5	4.49	13.3	4.46	13.8	4.45	14.9	4.45	16.0	4.48	17.3	4.51

Combination :Indoor/outdoor capacity ratio	Outdoor air temp. °CDB	Indoor air temp. : °CWB													
		14.0		16.0		18.0		19.0		21.0		23.0		25.0	
		TC	PI	TC	PI	TC	PI	TC	PI	TC	PI	TC	PI	TC	PI
		kW	kW	kW	kW	kW	kW	kW	kW	kW	kW	kW	kW	kW	kW
70%	-10.0	21.0	3.12	25.2	3.75	29.4	4.37	31.5	4.68	35.7	5.31	39.9	5.93	44.1	6.56
	-5.0	21.0	3.13	25.2	3.75	29.4	4.38	31.5	4.69	35.7	5.31	39.9	5.94	44.1	6.56
	0.0	21.0	3.13	25.2	3.75	29.4	4.38	31.5	4.69	35.7	5.32	39.9	5.94	44.1	6.57
	5.0	21.0	3.13	25.2	3.76	29.4	4.39	31.5	4.70	35.7	5.33	39.9	5.95	44.1	6.58
	10.0	21.0	3.14	25.2	3.77	29.4	4.39	31.5	4.71	35.7	5.33	39.9	5.96	44.1	6.59
	15.0	21.0	3.15	25.2	3.78	29.4	4.41	31.5	4.72	35.7	5.37	39.9	6.01	44.1	6.66
	20.0	21.0	3.17	25.2	3.83	29.4	4.49	31.5	4.83	35.7	5.51	39.9	6.20	44.1	6.89
	25.0	21.0	3.44	25.2	4.20	29.4	4.97	31.5	5.34	35.7	6.18	39.9	7.07	44.1	8.01
	30.0	21.0	4.37	25.2	5.28	29.4	6.23	31.5	6.73	35.7	7.77	39.9	8.87	44.1	10.02
	35.0	21.0	5.34	25.2	6.45	29.4	7.62	31.5	8.20	35.7	9.48	39.9	10.80	44.1	12.18
	40.0	21.0	6.38	25.2	7.71	29.4	9.11	31.5	9.83	35.7	11.32	39.9	12.88	44.1	14.51
	43.0	21.0	7.04	25.2	8.51	29.4	10.06	31.5	10.85	35.7	12.50	39.9	14.21	44.1	16.00
	46.0	20.8	7.66	24.9	9.27	29.1	10.95	31.2	11.81	35.3	13.61	37.1	13.72	37.6	12.86
	52.0	11.4	4.54	11.9	4.40	12.5	4.30	12.9	4.26	13.6	4.20	14.5	4.16	15.5	4.14

Combination :Indoor/outdoor capacity ratio	Outdoor air temp. °CDB	Indoor air temp. : °CWB													
		14.0		16.0		18.0		19.0		21.0		23.0		25.0	
		TC	PI	TC	PI	TC	PI	TC	PI	TC	PI	TC	PI	TC	PI
		kW	kW	kW	kW	kW	kW	kW	kW	kW	kW	kW	kW	kW	kW
60%	-10.0	18.0	2.68	21.6	3.21	25.2	3.75	27.0	4.02	30.6	4.55	34.2	5.09	37.8	5.62
	-5.0	18.0	2.68	21.6	3.22	25.2	3.75	27.0	4.02	30.6	4.55	34.2	5.09	37.8	5.63
	0.0	18.0	2.68	21.6	3.22	25.2	3.75	27.0	4.02	30.6	4.56	34.2	5.10	37.8	5.63
	5.0	18.0	2.69	21.6	3.22	25.2	3.76	27.0	4.03	30.6	4.57	34.2	5.10	37.8	5.64
	10.0	18.0	2.69	21.6	3.23	25.2	3.77	27.0	4.04	30.6	4.57	34.2	5.11	37.8	5.65
	15.0	18.0	2.70	21.6	3.24	25.2	3.78	27.0	4.05	30.6	4.59	34.2	5.13	37.8	5.68
	20.0	18.0	2.72	21.6	3.26	25.2	3.82	27.0	4.10	30.6	4.68	34.2	5.25	37.8	5.83
	25.0	18.0	2.88	21.6	3.51	25.2	4.16	27.0	4.47	30.6	5.13	34.2	5.78	37.8	6.49
	30.0	18.0	3.73	21.6	4.46	25.2	5.22	27.0	5.61	30.6	6.43	34.2	7.28	37.8	8.18
	35.0	18.0	4.55	21.6	5.45	25.2	6.38	27.0	6.85	30.6	7.86	34.2	8.90	37.8	9.98
	40.0	18.0	5.43	21.6	6.51	25.2	7.64	27.0	8.21	30.6	9.40	34.2	10.64	37.8	11.92
	43.0	18.0	5.99	21.6	7.19	25.2	8.43	27.0	9.07	30.6	10.39	34.2	11.75	37.8	13.16
	46.0	17.8	6.52	21.4	7.83	24.9	9.18	26.7	9.88	30.3	11.31	33.9	12.79	37.4	14.33
	52.0	11.1	4.58	11.4	4.38	11.9	4.22	12.1	4.15	12.6	4.03	13.3	3.93	14.0	3.86

* Use the above table when choosing the model of outdoor unit.
See “1-8. Calculation of Actual Capacity of Indoor Unit” under the section 2.

1. Capacity of Outdoor Unit

U-16MF3E8 (Cooling) **Capacity Ratio 30-130%**

TC: Total capacity (kW), PI: Power input (kW)

Combination :Indoor/outdoor capacity ratio	Outdoor air temp. °CDB	Indoor air temp. : °CWB													
		14.0		16.0		18.0		19.0		21.0		23.0		25.0	
		TC	PI	TC	PI	TC	PI	TC	PI	TC	PI	TC	PI	TC	PI
		kW	kW	kW	kW	kW	kW	kW	kW	kW	kW	kW	kW	kW	kW
50%	-10.0	15.0	2.23	18.0	2.68	21.0	3.12	22.5	3.35	25.5	3.79	28.5	4.24	31.5	4.69
	-5.0	15.0	2.23	18.0	2.68	21.0	3.13	22.5	3.35	25.5	3.80	28.5	4.24	31.5	4.69
	0.0	15.0	2.24	18.0	2.68	21.0	3.13	22.5	3.35	25.5	3.80	28.5	4.25	31.5	4.69
	5.0	15.0	2.24	18.0	2.69	21.0	3.13	22.5	3.36	25.5	3.81	28.5	4.25	31.5	4.70
	10.0	15.0	2.24	18.0	2.69	21.0	3.14	22.5	3.36	25.5	3.81	28.5	4.26	31.5	4.71
	15.0	15.0	2.25	18.0	2.70	21.0	3.15	22.5	3.37	25.5	3.82	28.5	4.27	31.5	4.72
	20.0	15.0	2.27	18.0	2.71	21.0	3.17	22.5	3.40	25.5	3.86	28.5	4.33	31.5	4.81
	25.0	15.0	2.35	18.0	2.86	21.0	3.37	22.5	3.62	25.5	4.16	28.5	4.69	31.5	5.21
	30.0	15.0	3.13	18.0	3.69	21.0	4.28	22.5	4.58	25.5	5.20	28.5	5.84	31.5	6.51
	35.0	15.0	3.81	18.0	4.51	21.0	5.23	22.5	5.59	25.5	6.37	28.5	7.16	31.5	7.97
	40.0	15.0	4.53	18.0	5.38	21.0	6.26	22.5	6.71	25.5	7.62	28.5	8.57	31.5	9.54
	43.0	15.0	4.99	18.0	5.94	21.0	6.91	22.5	7.41	25.5	8.42	28.5	9.47	31.5	10.54
	46.0	14.9	5.42	17.8	6.46	20.8	7.52	22.3	8.07	25.2	9.18	28.2	10.32	31.2	11.49
	52.0	10.9	4.73	11.1	4.46	11.4	4.24	11.5	4.14	11.8	3.96	12.2	3.81	12.7	3.68

Combination :Indoor/outdoor capacity ratio	Outdoor air temp. °CDB	Indoor air temp. : °CWB													
		14.0		16.0		18.0		19.0		21.0		23.0		25.0	
		TC	PI	TC	PI	TC	PI	TC	PI	TC	PI	TC	PI	TC	PI
		kW	kW	kW	kW	kW	kW	kW	kW	kW	kW	kW	kW	kW	kW
40%	-10.0	12.0	1.79	14.4	2.14	16.8	2.50	18.0	2.68	20.4	3.04	22.8	3.39	25.2	3.75
	-5.0	12.0	1.79	14.4	2.15	16.8	2.50	18.0	2.68	20.4	3.04	22.8	3.40	25.2	3.75
	0.0	12.0	1.79	14.4	2.15	16.8	2.51	18.0	2.68	20.4	3.04	22.8	3.40	25.2	3.76
	5.0	12.0	1.79	14.4	2.15	16.8	2.51	18.0	2.69	20.4	3.05	22.8	3.40	25.2	3.76
	10.0	12.0	1.80	14.4	2.16	16.8	2.51	18.0	2.69	20.4	3.05	22.8	3.41	25.2	3.77
	15.0	12.0	1.80	14.4	2.16	16.8	2.52	18.0	2.70	20.4	3.06	22.8	3.42	25.2	3.78
	20.0	12.0	1.81	14.4	2.18	16.8	2.54	18.0	2.71	20.4	3.07	22.8	3.44	25.2	3.81
	25.0	12.0	1.85	14.4	2.23	16.8	2.63	18.0	2.82	20.4	3.23	22.8	3.64	25.2	4.04
	30.0	12.0	2.57	14.4	2.99	16.8	3.41	18.0	3.63	20.4	4.08	22.8	4.54	25.2	5.01
	35.0	12.0	3.10	14.4	3.63	16.8	4.17	18.0	4.43	20.4	5.00	22.8	5.57	25.2	6.15
	40.0	12.0	3.67	14.4	4.31	16.8	4.97	18.0	5.30	20.4	5.98	22.8	6.67	25.2	7.38
	43.0	12.0	4.04	14.4	4.75	16.8	5.48	18.0	5.85	20.4	6.60	22.8	7.37	25.2	8.15
	46.0	11.9	4.38	14.3	5.16	16.6	5.96	17.8	6.37	20.2	7.19	22.6	8.03	24.9	8.89
	52.0	9.7	4.37	10.9	4.71	11.0	4.42	11.1	4.29	11.3	4.05	11.5	3.84	11.7	3.65

Combination :Indoor/outdoor capacity ratio	Outdoor air temp. °CDB	Indoor air temp. : °CWB													
		14.0		16.0		18.0		19.0		21.0		23.0		25.0	
		TC	PI	TC	PI	TC	PI	TC	PI	TC	PI	TC	PI	TC	PI
		kW	kW	kW	kW	kW	kW	kW	kW	kW	kW	kW	kW	kW	kW
30%	-10.0	9.0	1.34	10.8	1.61	12.6	1.88	13.5	2.01	15.3	2.28	17.1	2.55	18.9	2.81
	-5.0	9.0	1.34	10.8	1.61	12.6	1.88	13.5	2.01	15.3	2.28	17.1	2.55	18.9	2.82
	0.0	9.0	1.34	10.8	1.61	12.6	1.88	13.5	2.01	15.3	2.28	17.1	2.55	18.9	2.82
	5.0	9.0	1.35	10.8	1.61	12.6	1.88	13.5	2.02	15.3	2.29	17.1	2.55	18.9	2.82
	10.0	9.0	1.35	10.8	1.62	12.6	1.89	13.5	2.02	15.3	2.29	17.1	2.56	18.9	2.83
	15.0	9.0	1.35	10.8	1.62	12.6	1.89	13.5	2.03	15.3	2.30	17.1	2.57	18.9	2.84
	20.0	9.0	1.36	10.8	1.63	12.6	1.90	13.5	2.04	15.3	2.31	17.1	2.58	18.9	2.85
	25.0	9.0	1.38	10.8	1.65	12.6	1.93	13.5	2.07	15.3	2.36	17.1	2.65	18.9	2.94
	30.0	9.0	2.05	10.8	2.33	12.6	2.63	13.5	2.77	15.3	3.07	17.1	3.38	18.9	3.69
	35.0	9.0	2.44	10.8	2.81	12.6	3.18	13.5	3.36	15.3	3.75	17.1	4.13	18.9	4.52
	40.0	9.0	2.86	10.8	3.31	12.6	3.77	13.5	4.00	15.3	4.47	17.1	4.94	18.9	5.41
	43.0	9.0	3.13	10.8	3.64	12.6	4.15	13.5	4.41	15.3	4.93	17.1	5.45	18.9	5.98
	46.0	8.9	3.38	10.7	3.94	12.5	4.50	13.4	4.79	15.1	5.36	16.9	5.93	18.7	6.52
	52.0	7.3	3.38	8.7	3.93	10.2	4.50	10.9	4.78	10.9	4.44	11.0	4.16	11.1	3.90

* Use the above table when choosing the model of outdoor unit.
See “1-8. Calculation of Actual Capacity of Indoor Unit” under the section 2.

1. Capacity of Outdoor Unit

1-10. U-16MF3E8 (Heating)

Capacity Ratio 30-130%

TC: Total capacity (kW), PI: Power input (kW)

Combination :Indoor/outdoor capacity ratio	Outdoor air temp.		Indoor air temp. : °CDB													
			16.0		17.0		19.0		20.0		23.0		25.0		30.0	
			TC	PI	TC	PI	TC	PI	TC	PI	TC	PI	TC	PI	TC	PI
	°CDB	°CWB	kW	kW	kW	kW	kW	kW	kW	kW	kW	kW	kW	kW	kW	kW
130%	-19.8	-20.0	32.3	12.35	31.5	12.15	29.9	11.71	29.0	11.48	26.4	10.71	24.7	10.15	19.9	8.54
	-14.7	-15.0	34.7	12.70	33.9	12.48	32.1	12.02	31.2	11.77	28.5	10.97	26.6	10.38	21.5	8.72
	-9.6	-10.0	37.3	13.11	36.4	12.88	34.6	12.39	33.6	12.13	30.7	11.29	28.7	10.68	23.3	8.94
	-4.4	-5.0	42.7	14.06	41.7	13.77	39.7	13.25	38.6	12.96	35.3	12.02	33.0	11.34	26.8	9.43
	-1.8	-2.5	46.7	14.77	45.6	14.51	43.3	13.93	42.2	13.62	38.6	12.61	36.1	11.87	29.3	9.80
	0.8	0.0	50.9	15.22	49.7	14.94	47.3	14.32	46.0	14.00	42.1	12.94	39.3	12.17	32.0	10.04
	2.8	2.0	53.9	15.46	52.6	15.15	50.0	14.52	48.7	14.18	44.6	13.09	41.7	12.31	33.8	10.07
	6.0	5.0	58.8	15.82	57.4	15.51	54.7	14.86	53.3	14.52	47.8	12.91	43.8	11.73	33.8	8.93
	7.0	6.0	60.5	15.98	59.2	15.67	55.7	14.70	53.8	14.09	47.8	12.34	43.8	11.22	33.8	8.57
	8.6	7.5	61.7	15.39	59.7	14.81	55.7	13.67	53.8	13.12	47.8	11.51	43.8	10.48	33.8	8.03
	11.2	10.0	61.7	13.50	59.7	13.00	55.7	12.03	53.8	11.55	47.8	10.18	43.8	9.29	33.8	7.18
	16.4	15.0	61.7	10.11	59.7	9.77	55.7	9.10	53.8	8.77	47.8	7.81	43.8	7.19	33.8	5.67
	24.0	18.0	61.7	8.60	59.7	8.35	55.7	7.84	53.8	7.58	47.8	6.81	43.8	6.30	33.8	5.03

Combination :Indoor/outdoor capacity ratio	Outdoor air temp.		Indoor air temp. : °CDB													
			16.0		17.0		19.0		20.0		23.0		25.0		30.0	
			TC	PI	TC	PI	TC	PI	TC	PI	TC	PI	TC	PI	TC	PI
	°CDB	°CWB	kW	kW	kW	kW	kW	kW	kW	kW	kW	kW	kW	kW	kW	kW
120%	-19.8	-20.0	32.2	12.24	31.4	12.03	29.8	11.59	29.0	11.36	26.4	10.60	24.6	10.05	19.8	8.46
	-14.7	-15.0	34.6	12.58	33.8	12.37	32.1	11.91	31.2	11.66	28.4	10.87	26.5	10.29	21.4	8.64
	-9.6	-10.0	37.3	13.00	36.4	12.77	34.5	12.29	33.6	12.03	30.7	11.19	28.6	10.58	23.2	8.86
	-4.4	-5.0	42.7	14.00	41.7	13.72	39.6	13.11	38.6	12.86	35.2	11.92	32.9	11.25	26.7	9.34
	-1.8	-2.5	46.6	14.62	45.5	14.36	43.3	13.79	42.1	13.49	38.5	12.49	36.0	11.76	29.2	9.72
	0.8	0.0	50.9	15.03	49.7	14.75	47.2	14.15	45.9	13.83	42.0	12.79	39.2	12.03	31.9	9.93
	2.8	2.0	53.9	15.26	52.6	14.96	50.0	14.34	48.6	14.01	44.5	12.94	41.6	12.17	33.1	9.68
	6.0	5.0	58.7	15.63	57.4	15.33	54.4	14.59	52.5	14.01	46.7	12.30	42.8	11.20	33.1	8.59
	7.0	6.0	60.3	15.64	58.3	15.06	54.4	13.93	52.5	13.37	46.7	11.75	42.8	10.72	33.1	8.24
	8.6	7.5	60.3	14.51	58.3	13.98	54.4	12.94	52.5	12.43	46.7	10.95	42.8	10.00	33.1	7.72
	11.2	10.0	60.3	12.71	58.3	12.26	54.4	11.38	52.5	10.94	46.7	9.68	42.8	8.87	33.1	6.90
	16.4	15.0	60.3	9.49	58.3	9.19	54.4	8.59	52.5	8.29	46.7	7.42	42.8	6.85	33.1	5.44
	24.0	18.0	60.3	8.42	58.3	8.17	54.4	7.67	52.5	7.42	46.7	6.67	42.8	6.17	33.1	4.93

Combination :Indoor/outdoor capacity ratio	Outdoor air temp.		Indoor air temp. : °CDB													
			16.0		17.0		19.0		20.0		23.0		25.0		30.0	
			TC	PI	TC	PI	TC	PI	TC	PI	TC	PI	TC	PI	TC	PI
	°CDB	°CWB	kW	kW	kW	kW	kW	kW	kW	kW	kW	kW	kW	kW	kW	kW
110%	-19.8	-20.0	32.2	12.11	31.4	11.91	29.7	11.48	28.9	11.25	26.3	10.50	24.5	9.95	19.7	8.38
	-14.7	-15.0	34.6	12.47	33.7	12.25	32.0	11.79	31.1	11.55	28.3	10.77	26.4	10.19	21.3	8.56
	-9.6	-10.0	37.2	12.89	36.3	12.66	34.5	12.17	33.5	11.92	30.6	11.09	28.5	10.49	23.1	8.78
	-4.4	-5.0	42.7	13.91	41.6	13.64	39.6	13.06	38.5	12.75	35.2	11.83	32.8	11.15	26.6	9.26
	-1.8	-2.5	46.6	14.46	45.5	14.20	43.2	13.65	42.1	13.35	38.4	12.37	35.9	11.65	29.1	9.64
	0.8	0.0	50.8	14.85	49.6	14.57	47.1	13.97	45.8	13.66	41.9	12.63	39.1	11.89	31.7	9.82
	2.8	2.0	53.8	15.07	52.5	14.77	49.9	14.16	48.6	13.83	44.4	12.79	41.5	12.03	32.3	9.31
	6.0	5.0	58.7	15.44	56.9	14.92	53.1	13.82	51.3	13.29	45.6	11.71	41.8	10.70	32.3	8.25
	7.0	6.0	58.8	14.75	56.9	14.22	53.1	13.18	51.3	12.68	45.6	11.19	41.8	10.23	32.3	7.91
	8.6	7.5	58.8	13.68	56.9	13.19	53.1	12.25	51.3	11.78	45.6	10.42	41.8	9.54	32.3	7.41
	11.2	10.0	58.8	11.96	56.9	11.56	53.1	10.76	51.3	10.36	45.6	9.21	41.8	8.46	32.3	6.63
	16.4	15.0	58.8	8.91	56.9	8.64	53.1	8.10	51.3	7.83	45.6	7.05	41.8	6.52	32.3	5.23
	24.0	18.0	58.8	8.23	56.9	7.99	53.1	7.50	51.3	7.26	45.6	6.53	41.8	6.04	32.3	4.82

Combination :Indoor/outdoor capacity ratio	Outdoor air temp.		Indoor air temp. : °CDB													
			16.0		17.0		19.0		20.0		23.0		25.0		30.0	
			TC	PI	TC	PI	TC	PI	TC	PI	TC	PI	TC	PI	TC	PI
	°CDB	°CWB	kW	kW	kW	kW	kW	kW	kW	kW	kW	kW	kW	kW	kW	kW
100%	-19.8	-20.0	32.1	12.00	31.3	11.80	29.6	11.36	28.8	11.14	26.2	10.40	24.4	9.85	19.6	8.30
	-14.7	-15.0	34.5	12.35	33.7	12.14	31.9	11.68	31.0	11.44	28.2	10.66	26.3	10.09	21.3	8.48
	-9.6	-10.0	37.2	12.78	36.3	12.55	34.4	12.07	33.4	11.82	30.5	10.99	28.4	10.39	23.0	8.70
	-4.4	-5.0	42.6	13.79	41.6	13.54	39.5	12.98	38.4	12.68	35.1	11.68	32.7	11.06	26.5	9.18
	-1.8	-2.5	46.6	14.29	45.5	14.04	43.2	13.50	42.0	13.20	38.3	12.24	35.8	11.54	28.9	9.54
	0.8	0.0	50.8	14.66	49.6	14.39	47.0	13.80	45.8	13.49	41.8	12.48	39.0	11.75	31.5	9.65
	2.8	2.0	53.8	14.87	52.5	14.59	49.8	13.98	48.5	13.66	44.3	12.63	40.7	11.59	31.5	8.94
	6.0	5.0	57.4	14.60	55.6	14.09	51.9	13.09	50.0	12.59	44.4	11.15	40.7	10.19	31.5	7.91
	7.0	6.0	57.4	13.90	55.6	13.42	51.9	12.48	50.0	12.00	44.4	10.63	40.7	9.74	31.5	7.59
	8.6	7.5	57.4	12.86	55.6	12.42	51.9	11.56	50.0	11.14	44.4	9.89	40.7	9.08	31.5	7.11
	11.2	10.0	57.4	11.22	55.6	10.86	51.9	10.14	50.0	9.79	44.4	8.74	40.7	8.06	31.5	6.37
	16.4	15.0	57.4	8.37	55.6	8.13	51.9	7.66	50.0	7.42	44.4	6.70	40.7	6.21	31.5	4.98
	24.0	18.0	57.4	8.05	55.6	7.81	51.9	7.34	50.0	7.10	44.4	6.39	40.7	5.91	31.5	4.72

* Use the above table when choosing the model of outdoor unit.
See “1-8. Calculation of Actual Capacity of Indoor Unit” under the section 2.

1. Capacity of Outdoor Unit

U-16MF3E8 (Heating)

Capacity Ratio 30-130%

TC: Total capacity (kW), PI: Power input (kW)

Combination :Indoor/outdoor capacity ratio	Outdoor air temp.		Indoor air temp. : °CDB													
			16.0		17.0		19.0		20.0		23.0		25.0		30.0	
			TC	PI	TC	PI	TC	PI	TC	PI	TC	PI	TC	PI	TC	PI
	°CDB	°CWB	kW	kW	kW	kW	kW	kW	kW	kW	kW	kW	kW	kW	kW	kW
90%	-19.8	-20.0	31.8	11.55	31.0	11.36	29.3	10.94	28.5	10.72	25.8	10.00	24.0	9.48	19.3	7.99
	-14.7	-15.0	34.3	11.92	33.4	11.72	31.6	11.27	30.7	11.04	27.9	10.28	26.0	9.73	20.9	8.17
	-9.6	-10.0	37.0	12.37	36.0	12.15	34.1	11.67	33.2	11.42	30.2	10.62	28.1	10.04	22.6	8.39
	-4.4	-5.0	42.5	13.25	41.4	13.03	39.3	12.55	38.1	12.28	34.7	11.40	32.3	10.74	26.0	8.85
	-1.8	-2.5	46.4	13.63	45.2	13.39	42.9	12.87	41.7	12.60	37.9	11.70	35.3	11.03	28.3	9.12
	0.8	0.0	50.6	13.93	49.3	13.67	46.7	13.09	45.0	12.64	40.0	11.29	36.7	10.40	28.3	8.19
	2.8	2.0	51.7	13.23	50.0	12.82	46.7	12.01	45.0	11.60	40.0	10.40	36.7	9.62	28.3	7.68
	6.0	5.0	51.7	11.55	50.0	11.24	46.7	10.63	45.0	10.31	40.0	9.34	36.7	8.63	28.3	6.84
	7.0	6.0	51.7	11.32	50.0	10.97	46.7	10.28	45.0	9.94	40.0	8.92	36.7	8.24	28.3	6.55
	8.6	7.5	51.7	10.44	50.0	10.13	46.7	9.51	45.0	9.21	40.0	8.29	36.7	7.68	28.3	6.14
	11.2	10.0	51.7	9.07	50.0	8.82	46.7	8.32	45.0	8.07	40.0	7.31	36.7	6.80	28.3	5.50
	16.4	15.0	51.7	7.31	50.0	7.10	46.7	6.67	45.0	6.46	40.0	5.82	36.7	5.39	28.3	4.32
	24.0	18.0	51.7	7.31	50.0	7.10	46.7	6.67	45.0	6.46	40.0	5.82	36.7	5.39	28.3	4.32

Combination :Indoor/outdoor capacity ratio	Outdoor air temp.		Indoor air temp. : °CDB													
			16.0		17.0		19.0		20.0		23.0		25.0		30.0	
			TC	PI	TC	PI	TC	PI	TC	PI	TC	PI	TC	PI	TC	PI
	°CDB	°CWB	kW	kW	kW	kW	kW	kW	kW	kW	kW	kW	kW	kW	kW	kW
80%	-19.8	-20.0	31.6	11.19	30.8	10.99	29.1	10.59	28.2	10.37	25.5	9.68	23.7	9.17	18.9	7.72
	-14.7	-15.0	34.1	11.57	33.2	11.37	31.4	10.93	30.5	10.70	27.6	9.96	25.7	9.42	20.5	7.91
	-9.6	-10.0	36.8	12.08	35.9	11.86	33.9	11.32	32.9	11.10	29.9	10.31	27.8	9.73	22.2	8.13
	-4.4	-5.0	42.4	12.72	41.3	12.51	39.1	12.06	37.9	11.81	34.4	11.00	32.0	10.39	25.2	8.46
	-1.8	-2.5	45.9	12.84	44.4	12.49	41.5	11.78	40.0	11.42	35.6	10.33	32.6	9.59	25.2	7.71
	0.8	0.0	45.9	11.31	44.4	10.99	41.5	10.44	40.0	10.16	35.6	9.27	32.6	8.65	25.2	7.01
	2.8	2.0	45.9	10.45	44.4	10.21	41.5	9.71	40.0	9.45	35.6	8.64	32.6	8.07	25.2	6.56
	6.0	5.0	45.9	9.31	44.4	9.10	41.5	8.66	40.0	8.44	35.6	7.73	32.6	7.22	25.2	5.85
	7.0	6.0	45.9	9.06	44.4	8.82	41.5	8.35	40.0	8.11	35.6	7.38	32.6	6.89	25.2	5.61
	8.6	7.5	45.9	8.33	44.4	8.13	41.5	7.71	40.0	7.50	35.6	6.86	32.6	6.41	25.2	5.25
	11.2	10.0	45.9	7.20	44.4	7.04	41.5	6.72	40.0	6.55	35.6	6.03	32.6	5.67	25.2	4.70
	16.4	15.0	45.9	6.58	44.4	6.39	41.5	6.01	40.0	5.82	35.6	5.25	32.6	4.87	25.2	3.92
	24.0	18.0	45.9	6.58	44.4	6.39	41.5	6.01	40.0	5.82	35.6	5.25	32.6	4.87	25.2	3.92

Combination :Indoor/outdoor capacity ratio	Outdoor air temp.		Indoor air temp. : °CDB													
			16.0		17.0		19.0		20.0		23.0		25.0		30.0	
			TC	PI	TC	PI	TC	PI	TC	PI	TC	PI	TC	PI	TC	PI
	°CDB	°CWB	kW	kW	kW	kW	kW	kW	kW	kW	kW	kW	kW	kW	kW	kW
70%	-19.8	-20.0	31.7	10.98	30.9	10.79	29.1	10.38	28.2	10.17	25.5	9.48	23.6	8.97	18.8	7.56
	-14.7	-15.0	34.3	11.41	33.4	11.15	31.5	10.75	30.5	10.52	27.6	9.78	25.6	9.24	20.4	7.75
	-9.6	-10.0	37.1	11.85	36.1	11.66	34.1	11.22	33.1	10.96	29.9	10.13	27.7	9.56	22.0	7.94
	-4.4	-5.0	40.2	11.27	38.9	11.00	36.3	10.46	35.0	10.18	31.1	9.33	28.5	8.75	22.0	7.17
	-1.8	-2.5	40.2	10.09	38.9	9.88	36.3	9.44	35.0	9.21	31.1	8.48	28.5	7.96	22.0	6.54
	0.8	0.0	40.2	9.03	38.9	8.86	36.3	8.48	35.0	8.28	31.1	7.64	28.5	7.19	22.0	5.94
	2.8	2.0	40.2	8.35	38.9	8.19	36.3	7.85	35.0	7.67	31.1	7.10	28.5	6.69	22.0	5.55
	6.0	5.0	40.2	7.38	38.9	7.24	36.3	6.96	35.0	6.81	31.1	6.32	28.5	5.95	22.0	4.93
	7.0	6.0	40.2	7.11	38.9	6.97	36.3	6.67	35.0	6.51	31.1	6.02	28.5	5.68	22.0	4.74
	8.6	7.5	40.2	6.52	38.9	6.40	36.3	6.14	35.0	6.01	31.1	5.59	28.5	5.28	22.0	4.44
	11.2	10.0	40.2	5.84	38.9	5.67	36.3	5.34	35.0	5.23	31.1	4.90	28.5	4.66	22.0	3.98
	16.4	15.0	40.2	5.84	38.9	5.67	36.3	5.34	35.0	5.17	31.1	4.68	28.5	4.34	22.0	3.51
	24.0	18.0	40.2	5.84	38.9	5.67	36.3	5.34	35.0	5.17	31.1	4.68	28.5	4.34	22.0	3.51

Combination :Indoor/outdoor capacity ratio	Outdoor air temp.		Indoor air temp. : °CDB													
			16.0		17.0		19.0		20.0		23.0		25.0		30.0	
			TC	PI	TC	PI	TC	PI	TC	PI	TC	PI	TC	PI	TC	PI
	°CDB	°CWB	kW	kW	kW	kW	kW	kW	kW	kW	kW	kW	kW	kW	kW	kW
60%	-19.8	-20.0	32.5	11.07	31.6	10.87	29.8	10.45	28.8	10.23	26.0	9.53	24.1	9.01	18.9	7.49
	-14.7	-15.0	34.4	11.25	33.3	10.99	31.1	10.41	30.0	10.09	26.7	9.22	24.4	8.62	18.9	7.04
	-9.6	-10.0	34.4	10.33	33.3	10.14	31.1	9.72	30.0	9.49	26.7	8.77	24.4	8.22	18.9	6.69
	-4.4	-5.0	34.4	8.92	33.3	8.76	31.1	8.42	30.0	8.24	26.7	7.64	24.4	7.21	18.9	6.01
	-1.8	-2.5	34.4	8.01	33.3	7.88	31.1	7.59	30.0	7.43	26.7	6.92	24.4	6.54	18.9	5.48
	0.8	0.0	34.4	7.13	33.3	7.01	31.1	6.77	30.0	6.64	26.7	6.21	24.4	5.89	18.9	4.96
	2.8	2.0	34.4	6.56	33.3	6.46	31.1	6.25	30.0	6.14	26.7	5.75	24.4	5.47	18.9	4.63
	6.0	5.0	34.4	5.74	33.3	5.66	31.1	5.50	30.0	5.40	26.7	5.07	24.4	4.82	18.9	4.09
	7.0	6.0	34.4	5.45	33.3	5.38	31.1	5.21	30.0	5.12	26.7	4.83	24.4	4.60	18.9	3.94
	8.6	7.5	34.4	5.10	33.3	4.96	31.1	4.79	30.0	4.72	26.7	4.47	24.4	4.28	18.9	3.70
	11.2	10.0	34.4	5.10	33.3	4.96	31.1	4.68	30.0	4.53	26.7	4.11	24.4	3.82	18.9	3.31
	16.4	15.0	34.4	5.10	33.3	4.96	31.1	4.68	30.0	4.53	26.7	4.11	24.4	3.82	18.9	3.11
	24.0	18.0	34.4	5.10	33.3	4.96	31.1	4.68	30.0	4.53	26.7	4.11	24.4	3.82	18.9	3.11

* Use the above table when choosing the model of outdoor unit.
See “1-8. Calculation of Actual Capacity of Indoor Unit” under the section 2.

1. Capacity of Outdoor Unit

U-16MF3E8 (Heating)

Capacity Ratio 30-130%

TC: Total capacity (kW), PI: Power input (kW)

Combination :Indoor/outdoor capacity ratio	Outdoor air temp.		Indoor air temp. : °CDB													
			16.0		17.0		19.0		20.0		23.0		25.0		30.0	
			TC	PI	TC	PI	TC	PI	TC	PI	TC	PI	TC	PI	TC	PI
	°CDB	°CWB	kW	kW	kW	kW	kW	kW	kW	kW	kW	kW	kW	kW	kW	kW
50%	-19.8	-20.0	28.7	9.45	27.8	9.26	25.9	8.80	25.0	8.58	22.2	7.90	20.4	7.43	15.7	6.16
	-14.7	-15.0	28.7	8.80	27.8	8.65	25.9	8.33	25.0	8.16	22.2	7.56	20.4	7.07	15.7	5.84
	-9.6	-10.0	28.7	8.15	27.8	8.01	25.9	7.73	25.0	7.58	22.2	7.08	20.4	6.70	15.7	5.58
	-4.4	-5.0	28.7	6.98	27.8	6.88	25.9	6.66	25.0	6.54	22.2	6.14	20.4	5.83	15.7	4.94
	-1.8	-2.5	28.7	6.23	27.8	6.15	25.9	5.97	25.0	5.87	22.2	5.53	20.4	5.27	15.7	4.50
	0.8	0.0	28.7	5.51	27.8	5.45	25.9	5.31	25.0	5.23	22.2	4.95	20.4	4.74	15.7	4.08
	2.8	2.0	28.7	5.05	27.8	5.00	25.9	4.89	25.0	4.82	22.2	4.58	20.4	4.39	15.7	3.79
	6.0	5.0	28.7	4.37	27.8	4.29	25.9	4.21	25.0	4.16	22.2	3.98	20.4	3.83	15.7	3.34
	7.0	6.0	28.7	4.37	27.8	4.25	25.9	4.01	25.0	3.94	22.2	3.79	20.4	3.65	15.7	3.23
	8.6	7.5	28.7	4.37	27.8	4.25	25.9	4.01	25.0	3.89	22.2	3.54	20.4	3.40	15.7	3.03
	11.2	10.0	28.7	4.37	27.8	4.25	25.9	4.01	25.0	3.89	22.2	3.54	20.4	3.30	15.7	2.72
	16.4	15.0	28.7	4.37	27.8	4.25	25.9	4.01	25.0	3.89	22.2	3.54	20.4	3.30	15.7	2.70
	24.0	18.0	28.7	4.37	27.8	4.25	25.9	4.01	25.0	3.89	22.2	3.54	20.4	3.30	15.7	2.70

Combination :Indoor/outdoor capacity ratio	Outdoor air temp.		Indoor air temp. : °CDB													
			16.0		17.0		19.0		20.0		23.0		25.0		30.0	
			TC	PI	TC	PI	TC	PI	TC	PI	TC	PI	TC	PI	TC	PI
	°CDB	°CWB	kW	kW	kW	kW	kW	kW	kW	kW	kW	kW	kW	kW	kW	kW
40%	-19.8	-20.0	23.0	7.28	22.2	7.17	20.7	6.93	20.0	6.79	17.8	6.26	16.3	5.91	12.6	4.95
	-14.7	-15.0	23.0	6.74	22.2	6.65	20.7	6.44	20.0	6.33	17.8	5.95	16.3	5.65	12.6	4.71
	-9.6	-10.0	23.0	6.22	22.2	6.14	20.7	5.97	20.0	5.87	17.8	5.53	16.3	5.28	12.6	4.50
	-4.4	-5.0	23.0	5.30	22.2	5.24	20.7	5.12	20.0	5.04	17.8	4.79	16.3	4.58	12.6	3.96
	-1.8	-2.5	23.0	4.71	22.2	4.67	20.7	4.57	20.0	4.52	17.8	4.31	16.3	4.14	12.6	3.61
	0.8	0.0	23.0	4.15	22.2	4.12	20.7	4.05	20.0	4.01	17.8	3.84	16.3	3.70	12.6	3.25
	2.8	2.0	23.0	3.73	22.2	3.71	20.7	3.67	20.0	3.63	17.8	3.51	16.3	3.39	12.6	3.02
	6.0	5.0	23.0	3.63	22.2	3.54	20.7	3.35	20.0	3.25	17.8	3.04	16.3	2.97	12.6	2.68
	7.0	6.0	23.0	3.63	22.2	3.54	20.7	3.35	20.0	3.25	17.8	2.97	16.3	2.83	12.6	2.58
	8.6	7.5	23.0	3.63	22.2	3.54	20.7	3.35	20.0	3.25	17.8	2.97	16.3	2.77	12.6	2.43
	11.2	10.0	23.0	3.63	22.2	3.54	20.7	3.35	20.0	3.25	17.8	2.97	16.3	2.77	12.6	2.30
	16.4	15.0	23.0	3.63	22.2	3.54	20.7	3.35	20.0	3.25	17.8	2.97	16.3	2.77	12.6	2.30
	24.0	18.0	23.0	3.63	22.2	3.54	20.7	3.35	20.0	3.25	17.8	2.97	16.3	2.77	12.6	2.30

Combination :Indoor/outdoor capacity ratio	Outdoor air temp.		Indoor air temp. : °CDB													
			16.0		17.0		19.0		20.0		23.0		25.0		30.0	
			TC	PI	TC	PI	TC	PI	TC	PI	TC	PI	TC	PI	TC	PI
	°CDB	°CWB	kW	kW	kW	kW	kW	kW	kW	kW	kW	kW	kW	kW	kW	kW
30%	-19.8	-20.0	17.2	5.30	16.7	5.25	15.6	5.11	15.0	5.03	13.3	4.75	12.2	4.50	9.4	3.80
	-14.7	-15.0	17.2	4.91	16.7	4.86	15.6	4.74	15.0	4.68	13.3	4.44	12.2	4.26	9.4	3.64
	-9.6	-10.0	17.2	4.52	16.7	4.48	15.6	4.39	15.0	4.33	13.3	4.13	12.2	3.96	9.4	3.46
	-4.4	-5.0	17.2	3.84	16.7	3.82	15.6	3.75	15.0	3.72	13.3	3.57	12.2	3.44	9.4	3.04
	-1.8	-2.5	17.2	3.37	16.7	3.35	15.6	3.32	15.0	3.29	13.3	3.18	12.2	3.09	9.4	2.76
	0.8	0.0	17.2	2.90	16.7	2.90	15.6	2.89	15.0	2.88	13.3	2.82	12.2	2.75	9.4	2.49
	2.8	2.0	17.2	2.89	16.7	2.82	15.6	2.68	15.0	2.62	13.3	2.58	12.2	2.53	9.4	2.32
	6.0	5.0	17.2	2.89	16.7	2.82	15.6	2.68	15.0	2.61	13.3	2.39	12.2	2.25	9.4	2.08
	7.0	6.0	17.2	2.89	16.7	2.82	15.6	2.68	15.0	2.61	13.3	2.39	12.2	2.25	9.4	2.01
	8.6	7.5	17.2	2.89	16.7	2.82	15.6	2.68	15.0	2.61	13.3	2.39	12.2	2.25	9.4	1.90
	11.2	10.0	17.2	2.89	16.7	2.82	15.6	2.68	15.0	2.61	13.3	2.39	12.2	2.25	9.4	1.90
	16.4	15.0	17.2	2.89	16.7	2.82	15.6	2.68	15.0	2.61	13.3	2.39	12.2	2.25	9.4	1.90
	24.0	18.0	17.2	2.89	16.7	2.82	15.6	2.68	15.0	2.61	13.3	2.39	12.2	2.25	9.4	1.90

* Use the above table when choosing the model of outdoor unit.
See “1-8. Calculation of Actual Capacity of Indoor Unit” under the section 2.